T-solution Leader in Electrics & Automation

User Manual

LS Programmable Logic Controller

G3F-AD3A
G4F-AD3A
G6F-AD2A

Safety Instructions

- Read this manual carefully before installing, wiring, operating, servicing or inspecting this equipment.
- Keep this manual within easy reach for quick reference.

LS Industrial Systems

www.lsis.biz

Safety Precautions

Be sure to read carefully this safety precaution given in data sheet and user's manual before operating the module and follow them.

The precautions explained here only apply to the G3F-AD3A, G4F-AD3A, and G6F-AD2A.

For safety precautions on the PLC system, please see the MASTER-K 200S/300S/1000S User's manual and the GLOFA GM3/4/6 User's manual.

A precaution is given with a hazard alert triangular symbol to call your attention, and precautions are represented as follows according to the degree of hazard.

WARNING ⇨ If not provided with proper prevention, it can cause death or fatal injury or considerable loss of property.

CAUTION ⇨ If not properly observed, it can cause a hazard situation to result in severe or slight injury or a loss of property.

However, a precaution followed with **CAUTION** can also result in serious conditions.

Both of two symbols indicate that an important content is mentioned, therefore, be sure to observe it.

Keep this manual handy for your quick reference in necessary.

Design Precautions

CAUTION

Do not run I/O signal lines near to high voltage line or power line. Separate them as 100mm or more as possible. Otherwise, noise can cause module malfunction.

Installation Precautions

CAUTION

Operate the PLC in the environment conditions given in the general specifications

If operation in other environment not specified, it can cause an electric shock, a fire, malfunction or damage or degradation of the module.

Make sure the module fixing projections is inserted into the module fixing hole and fixed.

Improper installation of the module can cause malfunction, disorder or falling.

Wiring Precautions

CAUTION

When grounding a FG terminal, be sure to provide class 3 grounding which is dedicated to the PLC.

Before the PLC wiring, be sure to check the rated voltage and terminal arrangement for the module and observe them correctly. If a different power, not of the rated voltage, is applied or wrong wiring is provided, it can cause a fire or disorder of the module.

Fasten the terminal screws firmly to the defined torque. If loosely fasten, it can cause short circuit, a fire or malfunction.

Be careful that any foreign matter like wire scraps should not enter into the module. It can cause a fire, disorder or malfunction.

Test Run and Maintenance Precautions

CAUTION

Do not contact the terminals while the power is applied. It can cause malfunction.

When cleaning or driving a terminal screw, perform them after the power has been turned off.

Do not perform works while the power is applied, which can cause disorder or malfunction.

WARNING

Do not separate the module from the printed circuit board (PCB), or remodel the module. They can cause disorder, malfunction, damage of the module or a fire.

When mounting or dismounting the module, perform them after the power has been turned off.

Waste Disposal Precautions

CAUTION

When disposing the module, do it as an industrial waste.

◎ CONTENTS ◎

Chapter 1. INTRODUCTION

1.1 Features ---------- **1-1**

1.2 Terminology ---------- **1-2**

1.2.1 Analog Value : A ---------- 1-2

1.2.2 Digital Value : D ---------- 1-2

1.3 Analog to Digital Conversion Characteristics ---------- **1-3**

1.3.1 Voltage input ---------- 1-3

1.3.2 Current input ---------- 1-5

Chapter 2. SPECIFICATIONS

2.1 General Specifications ---------- **2-1**

2.2 Performance Specifications ---------- **2-2**

2.3 Names of Parts and Functions ---------- **2-4**

2.3.1 G3F-AD3A ---------- 2-4

2.3.2 G4F-AD3A ---------- 2-5

2.3.3 G6F-AD2A ---------- 2-6

2.4 I/O Conversion Characteristics ---------- **2-7**

2.4.1 Voltage Input Characteristics ---------- 2-8

2.4.2 Current Input Characteristics ---------- 2-10

2.4.3 Simultaneous Voltage and Current Input Characteristics ---------- 2-11

2.4.4 Analog input and Digital output characteristics ---------- 2-12

2.5 Processing Specification ---------- **2-13**

2.5.1 Sampling processing A/D conversion system ---------- 2-13

2.5.2 Averaging processing A/D conversion system ---------- 2-13

Chapter 3. INSTALLATION AND WIRING

3.1 Installation ---------- **3-1**

3.1.1 Installation Ambience ---------- 3-1

3.1.2 Handling Precautions ---------- 3-1

3.2 Wiring ---- **3-2**
3.2.1 Wiring Precautions ---- 3-2
3.2.2 Wiring Examples ---- 3-2

Chapter 4. FUNCTION BLOCK

4.1 Registration of the Function Block for the A/D Conversion Module on the GMWIN ---- **4-1**
4.2 Function Block for Local ---- **4-2**
4.2.1 Module Initialization ---- 4-2
4.2.2 Module Reading - Array Type ---- 4-4
4.2.3 Module Reading - Single Type ---- 4-5
4.3 Remote Function Block ---- **4-6**
4.3.1 Module Initialization ---- 4-6
4.3.2 Module Reading ---- 4-8
4.4 Errors on Function Block ---- **4-10**

Chapter 5. GM PROGRAMMING

5.1 Programming for Distinction of A/D Conversion Value ---- **5-1**
5.2 Programming for Display of A/D Conversion Value and Error Code on BCD Display... ---- **5-5**
5.3 Programming for Loading the A/D Conversion Module on Remote I/O Station ---- **5-8**

Chapter 6. Buffer Memory

6.1 The configuration of buffer memory ---- **6-1**
6.1.1 G6F-AD2A ---- 6-1
6.1.2 G3F-AD3A / G4F-AD3A ---- 6-2
6.2 The contents and description of buffer memory ---- **6-3**
6.2.1 G6F-AD2A ---- 6-3
6.2.2 G3F-AD3A / G4F-AD3A ---- 6-8

Chapter 7. Buffer read/write instructions

7.1 Buffer read instructions ---- **7-1**
7.1.1 GET/GETP instruction ---- 7-1
7.1.2 RGET instruction ---- 7-3
7.2 Buffer write instructuins ---- **7-6**
7.2.1 PUT/PUTP instruction ---- 7-6
7.2.2 RPUT instruction ---- 7-8

Chapter 8. MK Programming

8.1 Basic Programming **8-1**

8.1.1 G6F-AD2A 8-1

8.1.2 G3F-AD3A / G4F-AD3A 8-2

8.2 Example Programming **8-3**

8.2.1 A program for comparision of A/D conversion value 8-3

8.2.2 Output the analog input value by 7-segment display 8-5

8.2.3 An A/D module mounted on a remote station 8-7

Chapter 9. DIMENSIONS

9.1 G3F-AD3A Dimensions **9-1**

9.2 G4F-AD3A Dimensions **9-2**

9.3 G6F-AD2A Dimensions **9-3**

1 Introduction

The G3F-AD3A, G4F-AD3A, and G6F-AD2A modules are analog-to-digital conversion modules for use with the GLOFA PLC GM1/2/3/4/6 series and MASTER-K PLC K200S/300S/1000S series. The G3F-AD3A is used with GM1/2/3 series and K1000S series, G4F-AD3A is used with GM4 series and K300S series, and G6F-AD2A is used with GM6 series and K200S series. (Hereafter the G3F-AD3A, G4F-AD3A, and G6F-AD2A modules are called as the A/D conversion module)

The A/D conversion module is to convert an analog input signal (voltage or current) from external devices into a 12-bit signed binary digital value.

1.1 Features

1) Multi-channel analog to digital conversion is possible with a single A/D module.

- G6F-AD2A : 4 channels
- G4F-AD3A and G3F-AD3A : 8 channels

2) The select of voltage input or current input is possible by channel of A/D module.

3) The unlimited number of A/D modules can be mounted on a base board.

The maximum number of A/D modules depends on the power capacity of power supply module. (In case of use to the G6F-AD2A with G6F-DA2V and G6F-DA2I, it is depends on the power capacity of the GM6-PAFB)

1.2 Terminology

1.2.1 Analog value : A

Analog value is a continuously changing value such as voltage, current, temperature, speed pressure, flux, etc. Temperature, for example, is continuously changing according to the time. Because this temperature itself is not available for input of the PLC, the temperature should be converted an analog electrical signal by transducer. Moreover, the converted analog signal (voltage or current) has to be converted into a digital value with the A/D module because the PLC can handle only digital values.

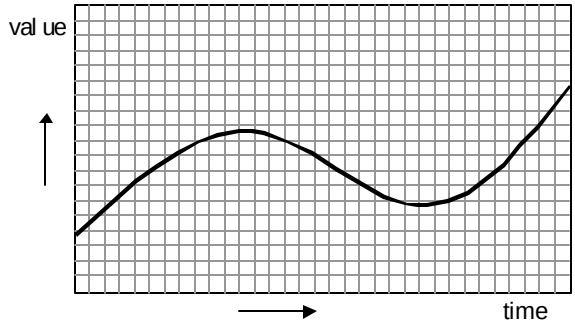

Figure 1.1 Analog value

1.2.2 Digital value : D

Digital value is a discrete data that are described in numbers such as 0, 1, 2, ... In general, a binary code system that are consist of 0(off) and 1(on) is used for expressing digital value. Also, BCD or hexadecimal values are used.

Because the CPU module of PLC can handle digital value only, the analog signal from external devices should be converted into analog signals with A/D module.

In the other hand, the digital output of CPU module should be converted into analog signal to be used for external devices. The D/A module (digital-analog converter) is used for converting digital values into analog output (voltage or current).

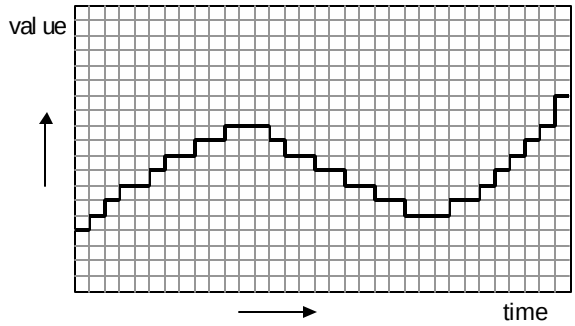

Figure 1.2 Digital value

1.3 Analog-to-Digital conversion characteristics

1.3.1 Voltage input

The A/D module converts the analog input from external devices to the digital value that can be handled by CPU module.

When the analog input is voltage input, the K4F-AD3A and K7F-AD3A has two input ranges such as 1 ~ 5VDC and 0 ~ 10VDC. The K3F-AD2A has three input range such as 1 ~ 5VDC, 0 ~ 10VDC, and –10 ~ 10VDC.

With all analog input range, the digital output is varied in the range of 0 ~ 4000. Therefore, the resolution of the A/D module is obtained by following equation;

$$Resolution\ of\ A/D\ module = \frac{Maximum\ input\ voltage - Minimum\ input\ voltage}{4000}$$

1) 1 ~ 5VDC range

When the A/D module operates with 1 ~ 5VDC range, the 1VDC analog input is converted to digital 0, and the 5VDC analog input is converted into digital output 4000. Therefore, the resolution per 1 digital value is 0.001VDC.

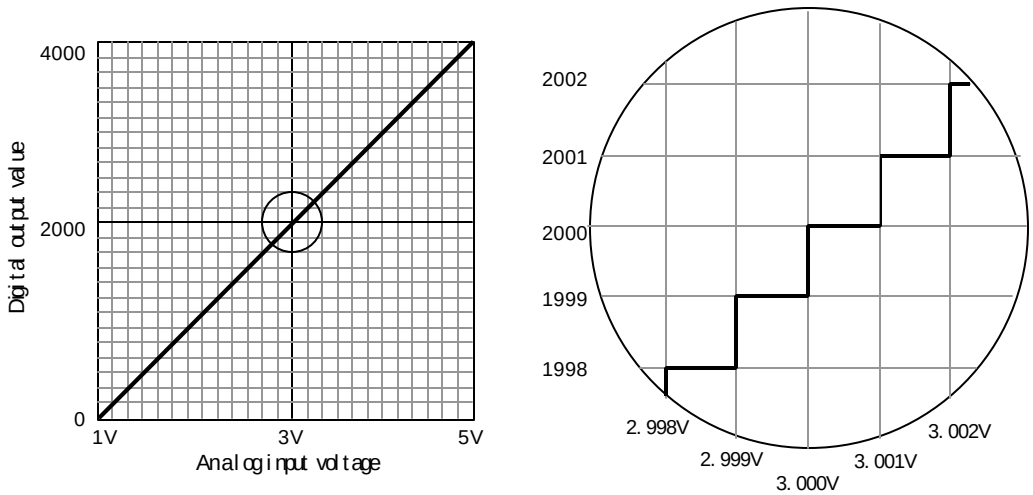

Figure 1.3 A/D conversion characteristics (1 ~ 5VDC)

2) 0 ~ 10VDC range

When the A/D module operates with 0 ~ 10VDC range, the 0VDC analog input is converted to digital 0, and the 10VDC analog input is converted into digital output 4000. Therefore, the resolution per 1 digital value is 0.0025VDC.

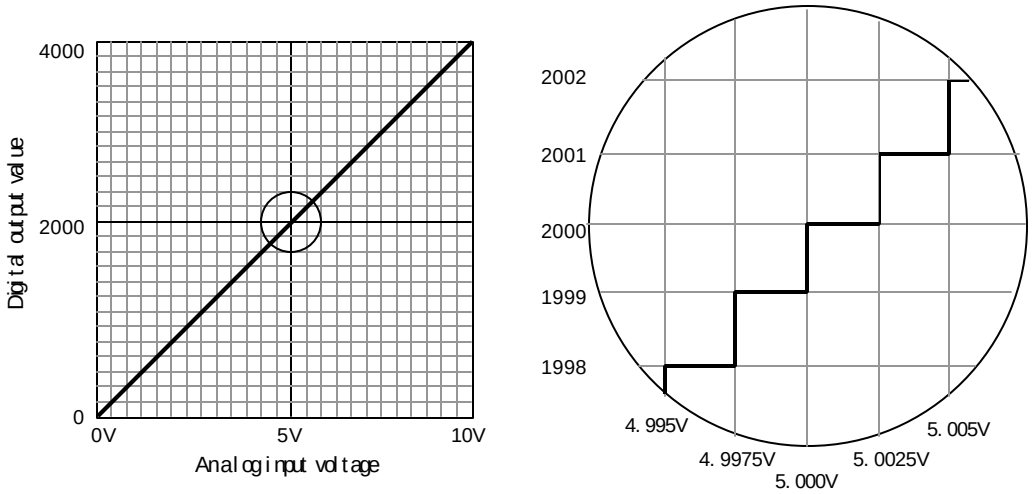

Figure 1.4 A/D conversion characteristic (0 ~ 10VDC)

3) –10 ~ 10VDC range

When the A/D module operates with –10 ~ 10VDC range, the 10VDC analog input is converted to digital 0, and the 10VDC analog input is converted into digital output 4000. Therefore, the resolution per 1 digital value is 0.005VDC.

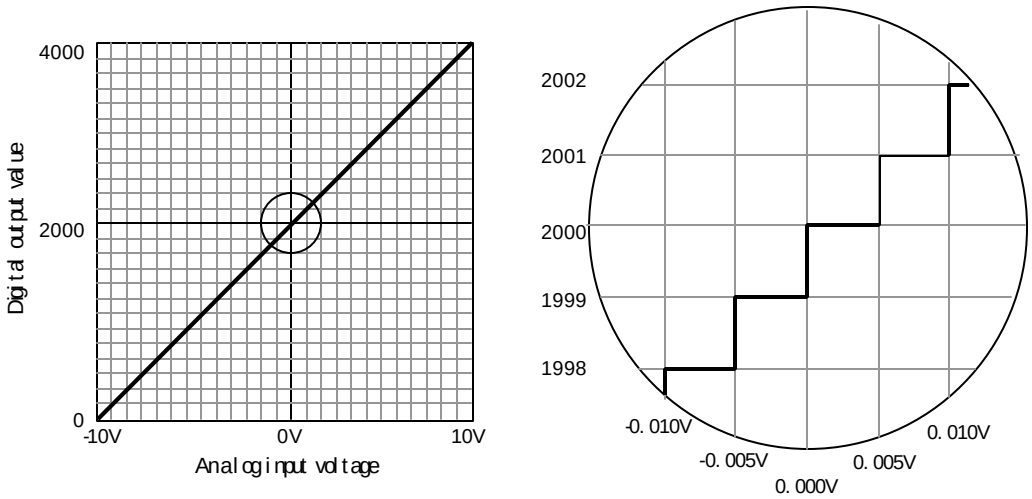

Figure 1.5 A/D conversion characteristic (-10 ~ 10VDC)

1.3.2 Current input

When the analog input is current input, the A/D conversion module has only one input ranges such as 4 ~ 20mA.

With all analog input range, the digital output is varied in the range of 0 ~ 4000. Therefore, the resolution of the A/D module is obtained by following equation;

$$Resolution\ of\ A/D\ module = \frac{Maximum\ input\ current - Minimum\ input\ current}{4000}$$

1) 4 ~ 20mA range

When the A/D module operates with 4 ~ 20mA range, the 4mA analog input is converted to digital 0, and the 20mA analog input is converted into digital output 4000. Therefore, the resolution per 1 digital value is 0.004mA.

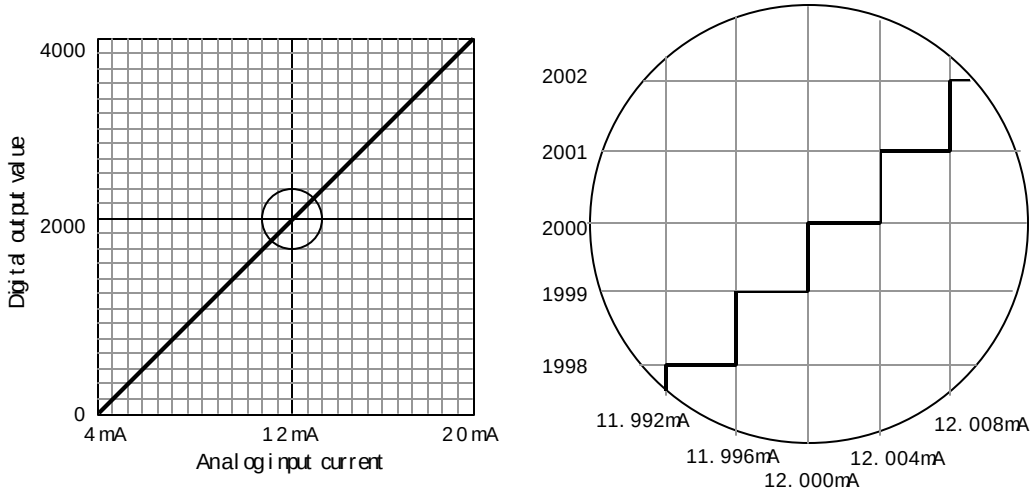

Figure 1.6 A/D conversion characteristic (4 ~ 20mA)

Chapter 2. SPECIFICATIONS

2.1 General Specifications

Table 2.1 shows the general specifications of GLOFA GM series and MASTER-K series.

Item	Specifications						Standard
Operating ambient temperature Storage ambient temperature	0 ~ 55℃ -25 ~ 70℃						
Operating ambient humidity	5 ~ 95%RH, non-condensing						
Storage ambient Humidity	5 ~ 95%RH, non-condensing						
Vibration	**In case of occasional vibration**					Sweep count	IEC 61131-2
	Frequency	Acceleration	Amplitude			10 times in each direction for X, Y, Z	
	10≤f∠57 Hz	-	0.075 mm				
	57≤f≤150 Hz	9.8m/s² (1G)	-				
	In case of continuos vibration						
	Frequency	Acceleration	Amplitude				
	10≤f∠57 Hz	-	0.035 mm				
	57≤f≤150 Hz	4.9m/s²(0.5G)	-				
Shocks	*Maximum shock acceleration: 147m/s² {15G} *Duration time :11 ms *Pulse wave: half sine wave pulse(3 times in each of X, Y and Z directions)						IEC 61131-2
Noise immunity	Square wave impulse noise	±1,500 V					LGIS Standard
	Electrostatic discharge	Voltage :4kV(contact discharge)					IEC 61131-2 IEC1000-4-2
	Radiated electromagnetic field	27 ~ 500 MHz, 10 V/m					IEC 61131-2 IEC1000-4-3
	Fast transient & burst noise	**Modules**	All power modules	Digital I/Os (Ue≥ 24 V)	Digital I/Os (Ue < 24 V) Analog I/Os communication I/Os		IEC 61131-2 IEC1000-4-4
		Voltage	2 kV	1 kV	0.25 kV		
Operating atmosphere	Free from corrosive gases and excessive dust						
Altitude for use	Up to 2,000m						
Pollution degree	2 or lower						
Cooling method	Self-cooling						

[Table 2.1] General specifications

REMARK

1) IEC(International Electrotechnical Commission)

: The international civilian organization which produces standards for electrical and electronics industry.

2) Pollution degree

: It indicates a standard of operating ambient pollution level.

The pollution degree 2 means the condition in which normally, only non-conductive pollution occurs.

Occasionally, however, a temporary conductivity caused by condensation shall be expected.

2.2 Performance Specifications

Table 2-2 shows performance specifications of A/D conversion module.

1) G3F-AD3A, G4F-AD3A

Items		Specifications	
		G3F-AD3A	G4F-AD3A
I/O points		16 points	
Analog input	Voltage	1 ~ 5 VDC (input resistance 600kΩ) 0 ~ 10 VDC (input resistance 600kΩ)	
	Current	DC 4 ~ 20 mA (input resistance 250Ω)	
	Voltage/Current selection	- Adjust input selection switch for each channel on side of module. (ON : Current, OFF : Voltage) - Selection of voltage range by program	
Digital output		- 16 bit binary value	
Maximum resolution	1 ~ 5VDC	1 mV (1/4000)	
	0 ~ 10VDC	2.5 mV (1/4000)	
	DC 4~20mA	4μA (1/4000)	
Overall Accuracy		±0.5% (accuracy to full scale)	
Max . conversion speed		5.0 ms/channel	
Max . absolute input		Voltage : 15V, Current : 25mA	
Number of analog input point		8 channels/module	
Isolation		Between input terminals and PLC: Photo coupler isolation (Between channels : Non-isolated)	
Terminals connected		20-point terminal block	
Internal current consumption		0.5 A	0.5 A
Weight		310	280

[Table 2.2] Performance Specifications

CAUTION

The manufacturer set value of A/D conversion module has been current input mode.

2) G6F-AD2A

Items		Specifications
I/O points		16 points
Analog input	Voltage	1 ~ 5 VDC (input resistance 1MΩ) 0 ~ 10 VDC (input resistance 1MΩ) -10 ~ 10VDC (input resistance 1MΩ)
	Current	DC4 ~ 20 mA (input resistance 250Ω)
	Voltage/Current selection	- Selection with Terminal (It has to be connected between V and I terminal to select current.) - Selection of voltage range by switch on the side of module
Digital output		- 12 bit binary value(-48 ~ 4047, -2048 ~ 2047) - Digital output value is selected by program.
Maximum resolution	1 ~ 5VDC	1 mV (1/4000)
	0 ~ 10VDC	2.5 mV (1/4000)
	-10 ~10VDC	5 mV (1/4000)
	DC 4 ~20mA	4μA (1/4000)
Overall Accuracy		±0.5% (accuracy to full scale)
Max . conversion speed		5.0 ms/channel
Max . absolute input		Voltage : 15V, Current : 25mA
Number of analog input point		4 channels/module
Isolation		Between input terminals and PLC: Photo coupler isolation (Between channels : Non-isolated)
Terminals connected		18-point terminal block
Current Consumption	+5VDC	40mA
	+15VDC	50mA
	-15VDC	20mA
Weight		200g

[Table 2.2] Performance Specifications

CAUTION

The factory-set value of A/D conversion module has been current input mode.
The G6F-AD2A has to be used with the GM6-PAFB.

2.3 Names of Parts and Functions

The names of parts and functions of the A/D conversion module are shown as below.

2.3.1 G3F-AD3A

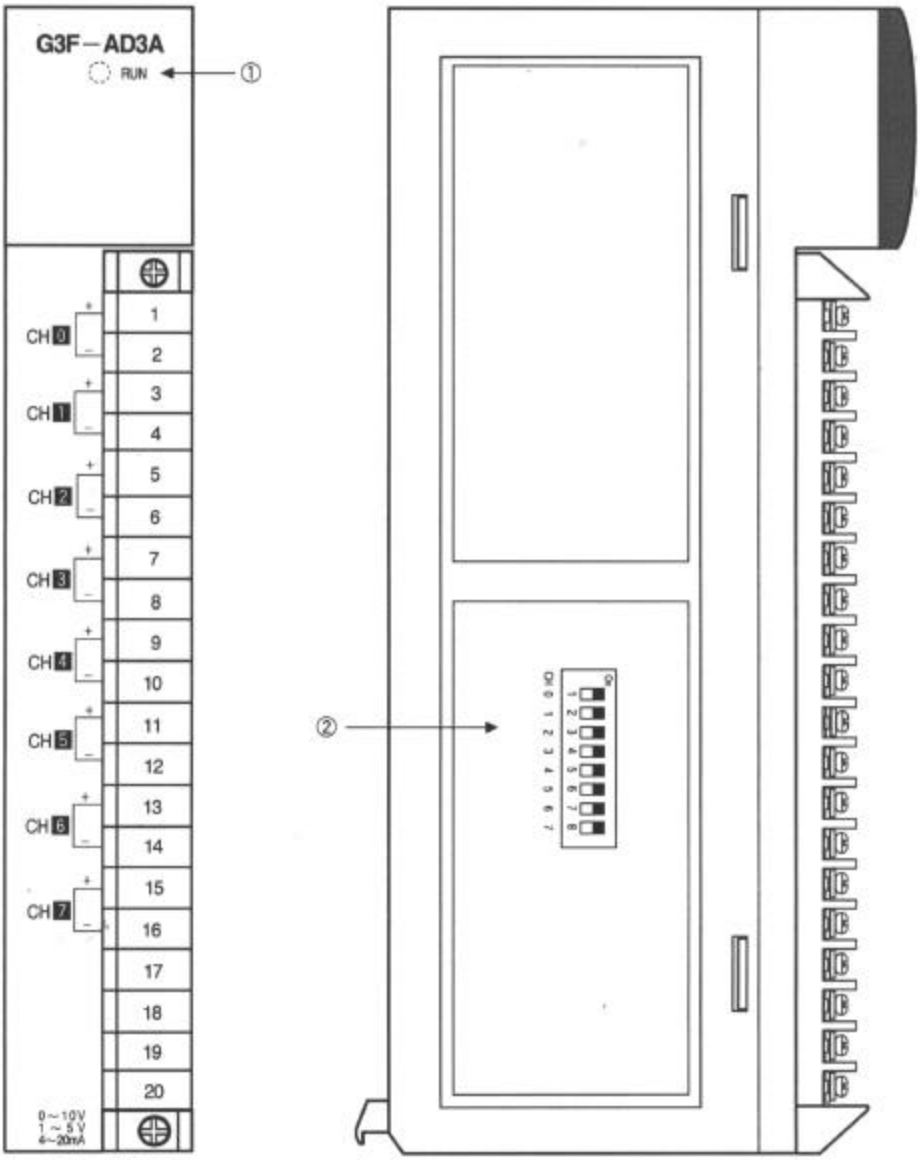

2.3.2 G4F-AD3A

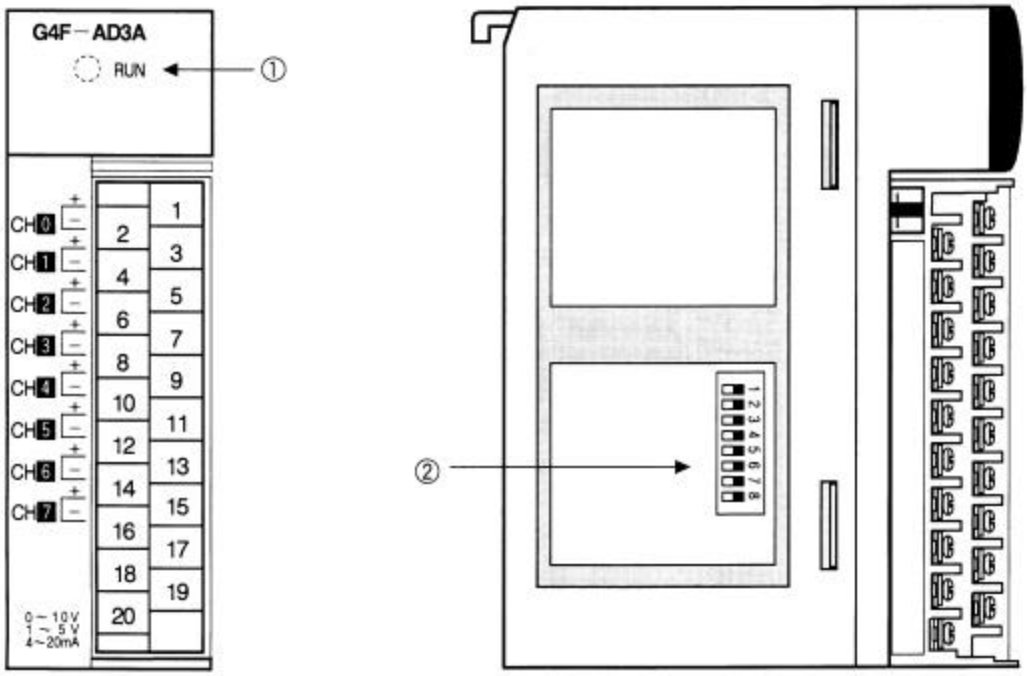

No	Description
←	RUN LED Indicates the operating status of the G3F-AD3A and G4F-AD3A.
↑	Selection switch of voltage/current 1)The switch status at voltage selection switch locates off status. 2)The switch statues at current selection switch locates on status

2.3.3 G6F-AD2A

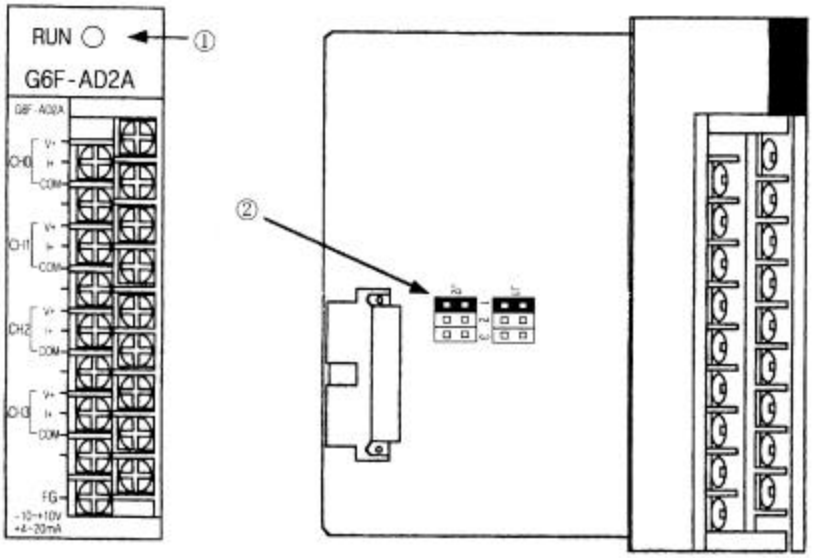

No	Description
← RUN LED Indicates the operating status of the G6F-AD2A.	
↑ Selection switch of voltage/current	

Analog Input		Input Range Selection Switch
Voltage	DC 1~5V	
	DC 0~10V	
	DC-10~10V	
Current	DC 4~20mA	

2.4 I/O Conversion Characteristics

Input / Output (hereafter I/O) conversion characteristics are expressed with the angle of the line between analog input(voltage and current) and matched digital value.

I/O conversion characteristics of the G3F-AD3A, G4F-AD3A are expressed with Fig 2.1, and I/O conversion characteristics of the G6F-AD2A is expressed with Fig 2.2

The voltage or current input for a channel is selected by analog input selection switch and the value of Offset / Gain can not be changed because it is fixed.

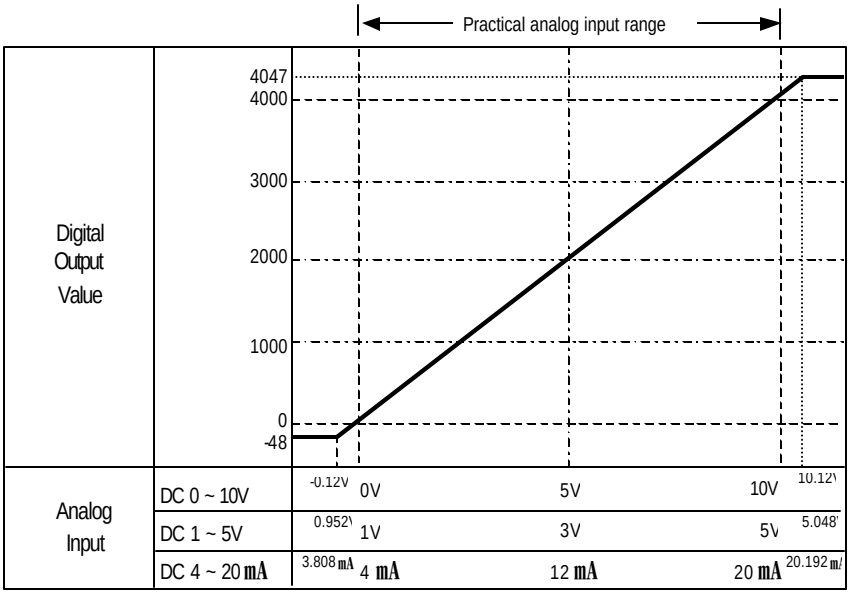

[Fig 2.1] I/O Conversion Characteristics

REMARK

1. The analog output value of over 4047 or –48 is fixed as 4047 or –48.
2. Keep the input voltage and current not to exceed +15V and 25mA.

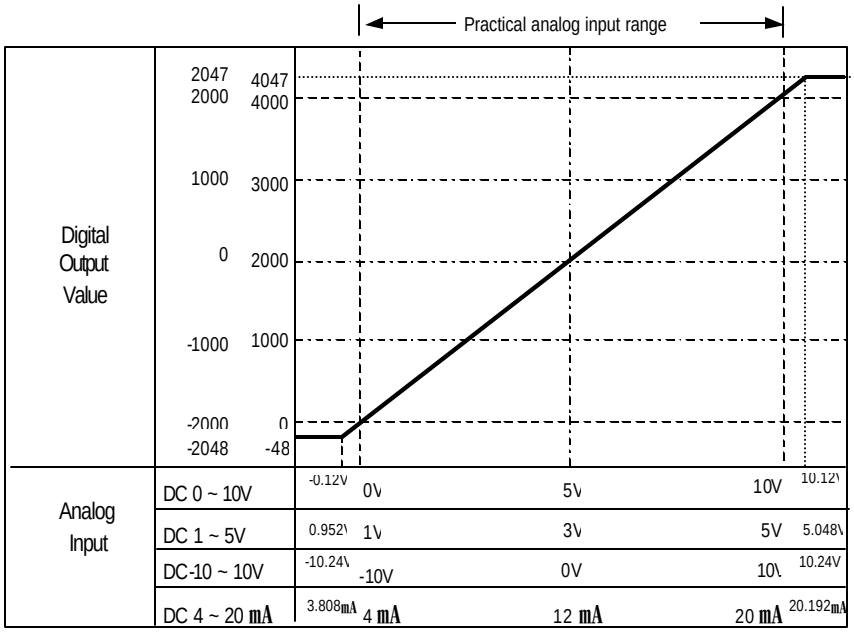

[Fig 2.1] I/O Conversion Characteristics

REMARK

1. The analog output value of over 4047 or –48(2047 or –2048) is fixed as 4047 or –48(2047 or –2048).
2. Keep the input voltage and current not to exceed +15V and 25mA.

2.4.1 Voltage Input Characteristics

1) G3F-AD3A, G4F-AD3A

For voltage input, the corresponding input selection switch of each channel should be set to "off".

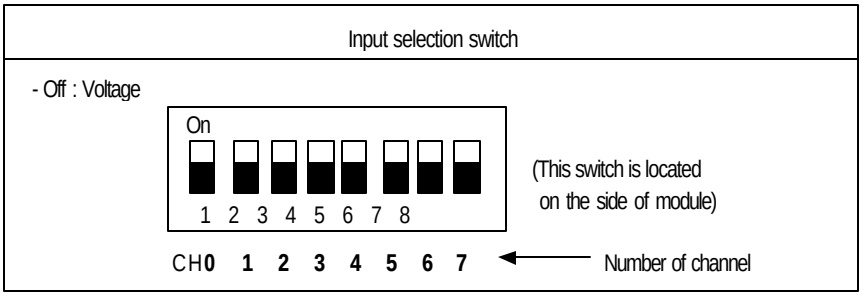

– The voltage input range is selected in program.
Input selection switch has to be located at off.

(1)Voltage input range : DC 0 ~10V

Digital output value for input voltage is shown as follows.

	Analog input voltage (V)						
	-0.12	0	2.5	5	7.5	10	10.12
Digital output value	-48	0	1000	2000	3000	4000	4047

(2)Voltage input range : DC 1 ~5V

Digital output value for input voltage is shown as follows.

	Analog input voltage (V)						
	0.952	1	2	3	4	5	5.048
Digital output value	-48	0	1000	2000	3000	4000	4047

2) G6F-AD2A

For voltage input, the corresponding input is selected by selection switch and selected input voltage range is same through whole channels.

1) Voltage input range : DC 1 ~ 5

Digital output value for input voltage is shown as follows.

	Analog input voltage (V)							Input range selection switch
	0.952	1	2	3	4	5	5.048	
Digital output value	-48	0	1000	2000	3000	4000	4047	
	-2048	-2000	-1000	0	1000	2000	2047	

2) **Voltage input range :** DC 0 ~ 10

Digital output value for input voltage is shown as follows.

	Analog input voltage (V)							Input range selection switch
	-0.12	0	2.5	5	7.5	10	10.12	
Digital output value	-48	0	1000	2000	3000	4000	4047	
	-2048	-2000	-1000	0	1000	2000	2047	

3) **Voltage input range :** DC -10 ~ 10

Digital output value for input voltage is shown as follows.

	Analog input voltage (V)							Input range selection switch
	-10.24	-10	-5	0	5	10	10.24	
Digital output value	-48	0	1000	2000	3000	4000	4047	
	-2048	-2000	-1000	0	1000	2000	2047	

2.4.2 Current Input Characteristics

1) G3F-AD3A, G4F-AD3A

For current input, the corresponding input selection switch of each channel should be set to "on".

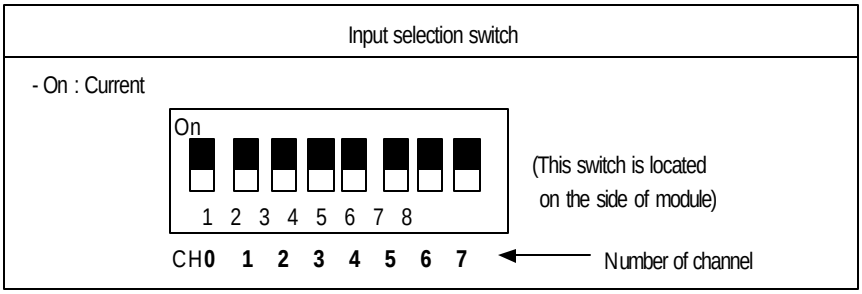

- Digital output value for input current is shown as follows.

	Analog input current(mA)						
	3.808	4	8	12	16	20	20.192
Digital output value	-48	0	1000	2000	3000	4000	4047

2) G6F-AD2A

Digital output value for input voltage is shown as follows.

	Analog input current (mA)							Input range selection switch
	3.808	4	8	12	16	20	20.192	J1 1 2 3 J2
Digital output value	-48 -2048	0 -2000	1000 -1000	2000 0	3000 1000	4000 2000	4047 2047	

It has to be connected between V and I terminal to select current.

2.4.3 Simultaneous Voltage and Current Input Characteristics

1) G3F-AD3A, G4F-AD3A

For simultaneous voltage and current input, the input conversion switch of each channel is set to corresponding voltage and current range.

Ex) Voltage input range: 0 to 3 Current input range: 4 to 7

Input selection switch

- On : Current
- Off : Voltage

(제품의 좌측면에 위치)

CH **0 1 2 3 4 5 6 7** ← 채널 번호

- Digital output value for analog input is shown as follows..

		Analog input						
Voltage (V)	0~10V	-0.12	0	2.5	5	7.5	10	10.12
	1~ 5V	0.952	1	2	3	4	5	5.048
Current (mA)	4 ~ 20 mA	3.808	4	8	12	16	20	20.192
Digital output value		-48	0	1000	2000	3000	4000	4047

2) G6F-AD2A

For simultaneous use of voltage and current input, the available input voltage rage is 0 ~ 5VDC only.

Digital output value for analog input is shown as follows..

	Analog input						
Voltage DC1~ 5V	0.952	1	2	3	4	5	5.048
Current DC4 ~ 20mA	3.808	4	8	12	16	20	20.192
Digital output value	-48	0	1000	2000	3000	4000	4047
	-2048	-2000	-1000	0	1000	2000	2047

Ex) channel for voltage : 0, channel for current : 1

Input Rage Selection Switch	Wiring Example	
	Voltage Input(Channel "0")	Current Input(Channel "1")
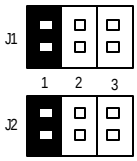	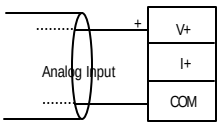	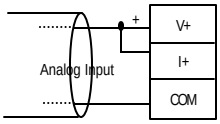

2.4.4 Analog input and Digital output characteristics

1) G3F-AD3A, G4F-AD3A

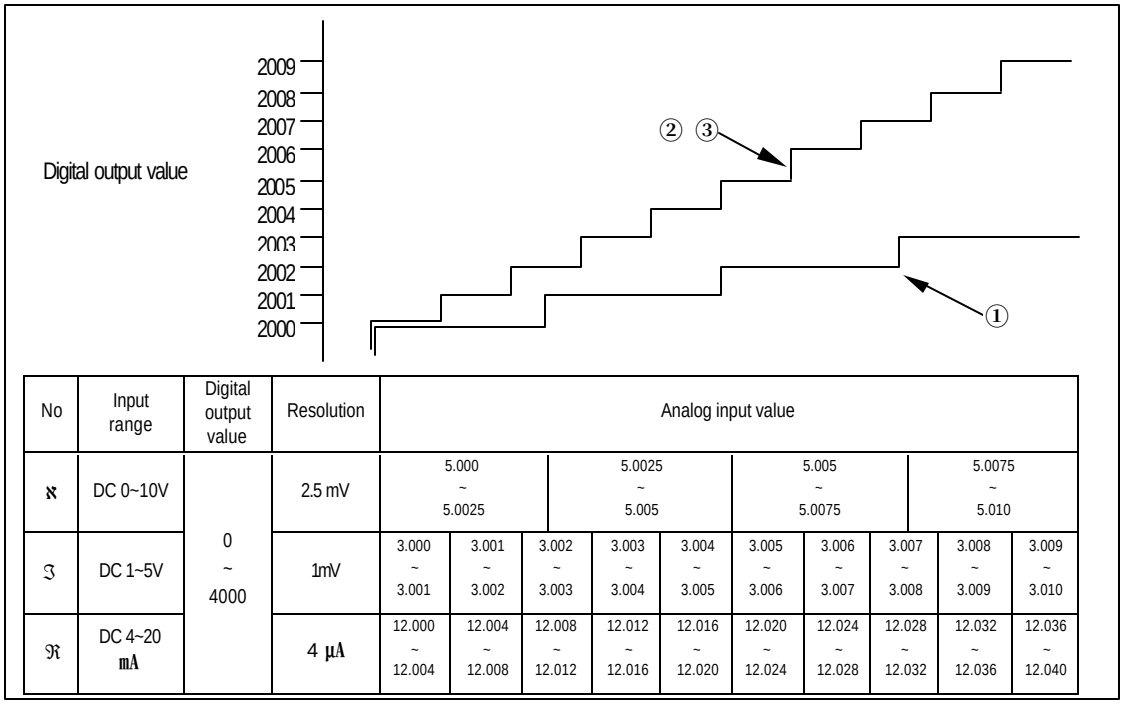

No	Input range	Digital output value	Resolution	Analog input value									
ℵ	DC 0~10V	0 ~ 4000	2.5 mV	5.000 ~ 5.0025		5.0025 ~ 5.005			5.005 ~ 5.0075			5.0075 ~ 5.010	
ℑ	DC 1~5V		1mV	3.000 ~ 3.001	3.001 ~ 3.002	3.002 ~ 3.003	3.003 ~ 3.004	3.004 ~ 3.005	3.005 ~ 3.006	3.006 ~ 3.007	3.007 ~ 3.008	3.008 ~ 3.009	3.009 ~ 3.010
ℜ	DC 4~20 mA		4 μA	12.000 ~ 12.004	12.004 ~ 12.008	12.008 ~ 12.012	12.012 ~ 12.016	12.016 ~ 12.020	12.020 ~ 12.024	12.024 ~ 12.028	12.028 ~ 12.032	12.032 ~ 12.036	12.036 ~ 12.040

Analog input and Digital output

2) G6F-AD2A

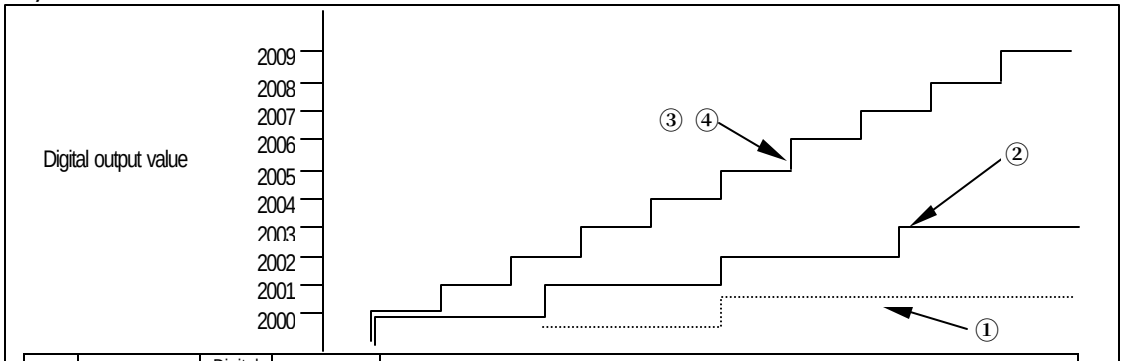

No	Input range	Digital output value	Resolution	Analog input value									
ℵ	DC-10~10V	0 ~ 4000 or -2048 ~ 2047	5mV	0.000 ~ 0.005					0.005 ~ 0.010				
ℑ	DC 0~10V		2.5 mV	5.000 ~ 5.0025		5.0025 ~ 5.005			5.005 ~ 5.0075			5.0075 ~ 5.010	
ℑ	DC 1~5V		1mV	3.000 ~ 3.001	3.001 ~ 3.002	3.002 ~ 3.003	3.003 ~ 3.004	3.004 ~ 3.005	3.005 ~ 3.006	3.006 ~ 3.007	3.007 ~ 3.008	3.008 ~ 3.009	3.009 ~ 3.010
ℜ	DC 4~20 mA		4 μA	12.000 ~ 12.004	12.004 ~ 12.008	12.008 ~ 12.012	12.012 ~ 12.016	12.016 ~ 12.020	12.020 ~ 12.024	12.024 ~ 12.028	12.028 ~ 12.032	12.032 ~ 12.036	12.036 ~ 12.040

Analog input and digital output value

2.5 Processing specifications

2.5.1 Sampling processing A/D conversion system

The analog values input to the channels designated for sampling processing by the CPU are converted to digital output values one by one and the digital output values are stored in the buffer memory.

As the A/D module scans each channel, the value appearing at the instant is written to the buffer memory as a digital value. The timing of this sampling depends on the number of channels used, and may be found from the following expression.

Process time = Number of channels used ´ Maximum conversion time (5 ms)

The process time when 4 channels is used, for example, will be 20 msec = 4×5 ms

2.5.2 Averaging processing A/D conversion system

The A/D module makes the A/D conversion for any channels to which averaging processing has been specified from the CPU. Using a preset count, an average is calculated (excluding the maximum value and the minimum value) and stored to the buffer memory. The preset count can be set as 2 to 255 times.

The time in which the average value by this processing is stored in the buffer memory varies with the number of channels used.

Processing time = Count setting ´ No. of channels ´ 5ms (Max conversion time)

The processing time when count value is 50 and 4 channels are used, for example, will be 50 × 4 ×5ms = 1000ms.

3 Installation and wiring

3.1 Installation

3.1.1 Installation ambiance

The A/D module has designed to have high reliability regardless of its installation ambiance. However, please be sure to check the following precautions for higher reliability and stability of system.

1) Ambiance requirements

Avoid installing the A/D module in following locations where;

① temperature may experience ambient drops or rising.
(It should stay within 0 °C ~ 55 °C or 32 °F ~ 131 °F)

② condensation may occur due to abrupt temperature changes

③ vibration and shock are directly transmitted to the PLC system.

④ the PLC system is exposed to the direct rays of the sun.

⑤ the PLC system is exposed to corrosive or inflammable gas.

⑥ the PLC system is exposed to conductive powder, oil mist, salt, or organic solvent.

2) Installing and wiring

① During wiring or other work, do not allow any wire scraps to enter into the module.

② Install the module on location that is convenient for operation.

③ Be sure that it is not located near high voltage equipment on the same panel.

④ Be sure to install the module at least 50 mm away from a duct or other devices.

⑤ Be sure to be grounded to locations that have good noise immunity.

3.1.2 Handling precautions

From unpacking to installation, be sure to check the following;

① Do not drop it off, and make sure that strong impacts should not be applied.

② Do not dismount printed circuit boards from the case. It can cause malfunctions of module.

③ Be sure to disconnect electrical power before mounting / dismounting the module.

3.2 Wiring

3.2.1 Wiring precautions

① Separate AC and external input signal of A/D module wiring not to be affected by surge or induced noise in the AC.

② External wiring has to be at least AWG32 (0.3mm^2), and be selected in consideration of operating ambiance and/or allowable current.

③ Separate wiring from device and/or substances generating intense heat, and oil not to make short-circuit which leads to damage and/or mis-operation.

④ Be careful not to connect external power supply with wrong polarity.

⑤ Separate external wiring sufficiently from high voltage and power supply cable not to cause induced noise or malfunction of module.

3.2.2 Wiring examples

1) G6F-AD2A

① Voltage input

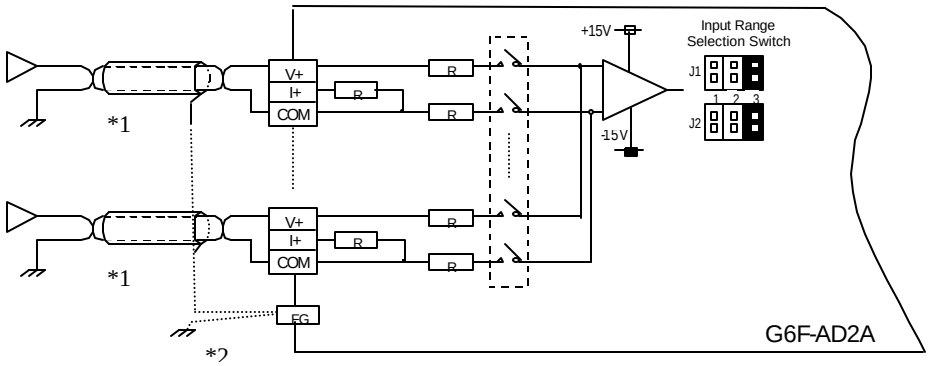

② Current input

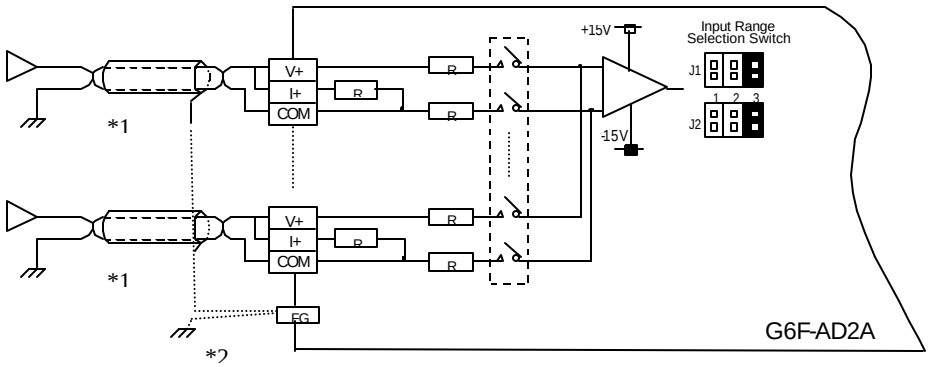

*1: Use a two-core twisted pair shielded cable

*2 : If noise is expected, ground the cable and FG terminal as shown in figure.

2) G3F-AD3A / G4F-AD3A

① Voltage input

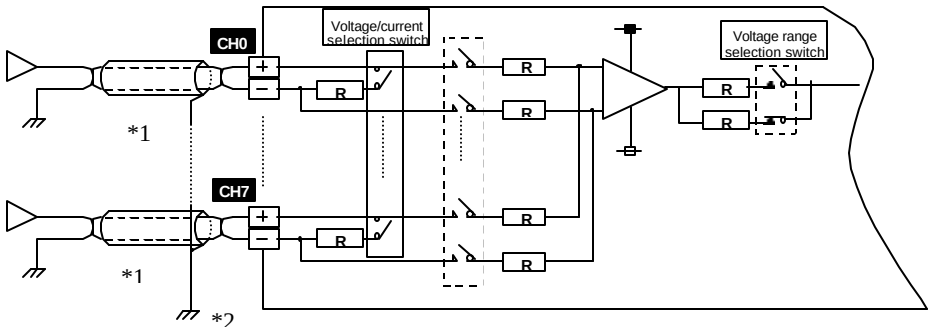

② Current input

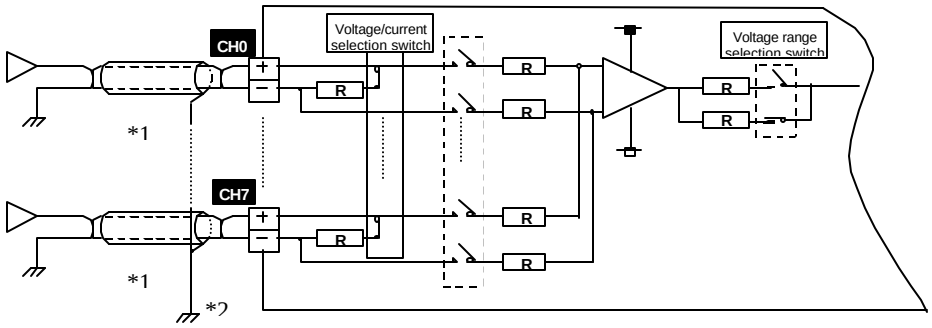

*1: Use a two-core twisted pair shielded cable

*2 : If noise is expected, ground the cable as shown in figure.

CHAPTER 4. FUNCTION BLOCK

This shows function block for A/D conversion module on the GMWIN.

A kind of function block is as follows.

No	G3F-AD3A		G4F-AD3A		G6F-AD2A		Function
	Local	Remote	Local	Remote	Local	Remote	
1	AD3INI	ADR3INI	AD3INI	ADR3INI	AD2INI	ADR62INI	Initializing module
2	AD3ARD	ADR3RD	AD3ARD	ADR3RD	AD2ARD	ADR62RD	Reading A/D converted value(array Type)
3	AD3RD	-	AD3RD	-	AD2RD	-	Reading A/D converted value(Single Type)

The function block type and functions of input/output parameters of G3F-AD3A and G4F-AD3A are same.

4.1 Registration of the Function Block for A/D Conversion Module on the GMWIN

Function Block is inserted on the execution of the GMWIN according to following procedure.

Function block can be inserted only in the open condition of the Project.

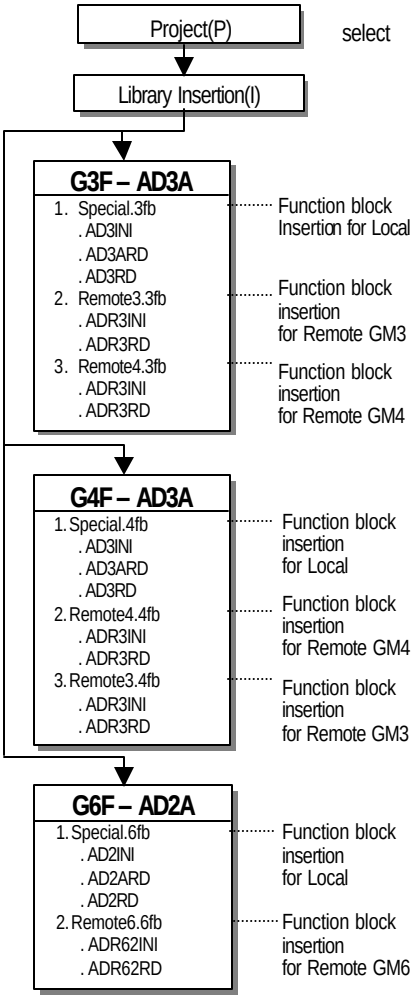

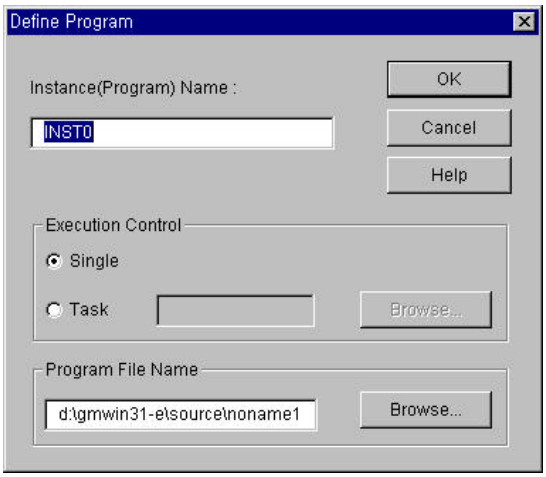

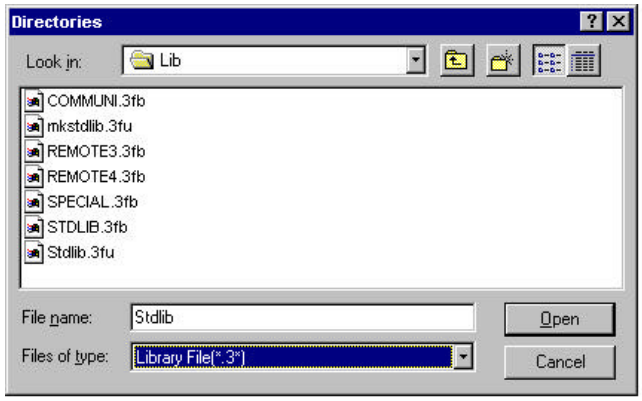

4.2 Function Block for Local

4.2.1 Module Initialization

1) G3F-AD3A, G4F-AD3A

Module Initialization function block is used in a program with setting of A/D conversion module located base number, slot number of located module on base, specifying a channel enable, analog input data type and the information of average processing.

Function block	I/O	Variable	Data type	Descriptions
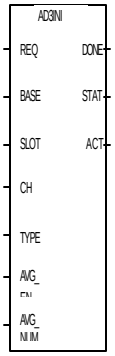	Input	REQ	BOOL	Function Block Execution Request Area - The execution of function block initialization is requested in this area. - If the status of condition connected with this area is changed from low(0) to high(1), function block initialization for the module is executed.
		BASE	USINT	Base Location Number Area - The base No. on which A/D conversion module is mounted is written on this area. - Setting range : 0 to 3
		SLOT	USINT	Slot Location Number Area - The slot No. on which A/D conversion module is mounted is written on this area. - Setting range: 0 to 7
		CH	BOOL[8]	Available Channel Specification Area - Enabled channels are specified to 1 and disabled channels are specified to 0.
		TYPE	BOOL[8]	Analog Input Data Type Specification Area - Output digital data type for each channel is specified in this area. - 0 is for the range of 1 ~ 5VDC and DC4 ~ 20mA. - 1 is for the range of 0 ~ 10VDC
		AVG_ EN	BOOL[8]	Enable / Disable of Average processing - 0 is for the sampling processing. - 1 is for the average processing of the number of times.
		AVG_ NUM	USINT [8]	Set a constant of the average processing of the number of times. - Setting range : 2 ~ 255
	Output	DONE	BOOL	Function Block Execution Complete Area - When function block initialization is executed with no error, 1 is written and until next execution, 1 is continuing. When error occurs, 0 is written and operation come to stop.
		STAT	USINT	Error Code Display Area - When error occurs during function block initialization, the error code number is written.
		ACT	BOOL[8]	Channel Operation Display Area - After execution the function block of initialization with no error, if the setting condition of specified channel is normal then output '1', or if abnormal, output 0'. - No specified channel is '0'.-

REMARK

BOOL[8] and USINT[8] of data type means that the number of element is 8, and also this means the whole number of channels and channel number.

2) G6F-AD2A

Module Initialization function block is used in a program with setting of A/D conversion module located base number, slot number of located module on base, specifying a channel enable, analog input data type and information of average processing.

Function block	I/O	Variable	Data type	Descriptions
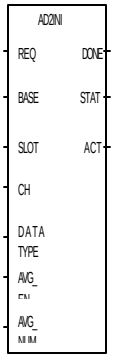	Input	REQ	BOOL	Function Block Execution Request Area - The execution of function block initialization is requested in this area. - If the status of condition connected with this area is changed from low(0) to high(1), function block initialization for the module is executed.
		BASE	USINT	Base Location Number Area - The base No. on which A/D conversion module is mounted is written on this area. - Setting range : 0
		SLOT	USINT	Slot Location Number Area - The slot No. on which A/D conversion module is mounted is written on this area. - Setting range: 0 to 7
		CH	BOOL[4]	Available Channel Specification Area - Enabled channels are specified to 1 and disabled channels are specified to 0.
		DATA TYPE	BOOL[4]	Digital Output Data Type Specification Area - 0 is for the range of –48 ~ 4047 - 1 is for the range of –2048 ~ 2047
		AVG_ EN	BOOL[4]	Enable / Disable of Average processing - 0 is for the sampling processing. - 1 is for the average processing for the number of times.
		AVG_ NUM	USINT[4]	Set a constant of the average processing of the number of times. - Setting range : 2 ~ 255
	Output	DONE	BOOL	Function Block Execution Complete Area - When function block initialization is executed with no error, 1 is written and 1 is kept until next execution. When error occurs, 0 is written and operation come to stop.
		STAT	USINT	Error Code Display Area - When error occurs during function block initialization, the error code number is written.
		ACT	BOOL[4]	Channel Operation Display Area - The channel specified after executing the function block initialization with no error is right, 1 is written and, on the non-specified channel, 0 is written.

REMARK

BOOL[4] and USINT[4] of data type means that the number of element is 4, and also this means the whole number of channels and channel number.

4.2.2 Module Reading-Array Type

1) G3F-AD3A, G4F-AD3A

Array type of function block for reading the module is performed for every channel in block and the specified channels are used to read output variable of data displayed from A/D conversion digital value.

Function block	I/O	Variable	Data type	Descriptions
AD3ARD REQ DONE BASE STAT SLOT ACT CH DATA	Input	REQ	BOOL	Function Block Execution Request Area - The execution of function block reading is requested in this area. - If the status to be connected with this area is satisfied on the program operation and input condition changes from low(0) to high(1), function block initialization for the module is executed.
		BASE	USINT	Base Location Number Area - The base No. on which A/D conversion module is mounted is written on this area. - Setting range : 0 to 3
		SLOT	USINT	Slot Location Number Area - The slot No. on which A/D conversion module is mounted is written on this area. - Setting range: 0 to 7
		CH	BOOL[8]	Available Channel Specification Area - Enabled channels are specified to 1 and disabled channels are specified to 0.
	output	DONE	BOOL	Function Block Execution Complete Area - When function block reading is executed with no error, 1 is written and until next execution, 1 is continuing. When error occurs, 0 is written and operation come to stop
		STAT	USINT	Error Code Display Area - When error occurs during function block reading, the error code number is written.
		ACT	BOOL[8]	Channel Operation Display Area - After execution the function block of initialization with no error, if the setting condition of specified channel is normal then output '1', or if abnormal, output 0'. - No specified channel is '0'.-
		DATA	INT[8]	A/D Conversion Value Output Area Output data range : -48 ~ 4047

REMARK

BOOL[8] and USINT[8] of data type means that the number of element is 8, and also this means the whole number of channels and channel number.

2) G6F-AD2A

Array type of function block for reading is performed for all channels in module and the specified channel is used to read output variable of data displayed from A/D conversion digital value.

Function block	I/O	Variable	Data type	Descriptions
AD2ARD REQ DONE BASE STAT SLOT ACT CH DATA	Input	REQ	BOOL	Function Block Execution Request Area - The execution of function block reading is requested in this area. - If input condition is changed from low(0) to high(1), function block initialization for the module is executed.
		BASE	USINT	Base Module Location Number Area - The base No. on which A/D conversion module is mounted is written on this area. - Setting range : 0
		SLOT	USINT	Slot Location Number Area - The slot No. on which A/D conversion module is mounted is written on this area. - Setting range: 0 to 7
		CH	BOOL[4]	Available Channel Specification Area - Available channels are specified in this area. - Enabled channels are specified to 1 and disabled channels are specified to 0.
	Output	DONE	BOOL	Function Block Execution Complete Area - When function block reading is executed with no error, 1 is written and 1 is kept until next execution. When error occurs, 0 is written and operation come to stop
		STAT	USINT	Error Code Display Area - When error occurs during function block reading, the error code number is written. - Error code is referred to Manual 4.3.
		ACT	BOOL[4]	Channel Operation Display Area - The channel specified after executing the function block read with no error is right, 1 is written and, on the non-specified channel, 0 is written
		DATA	INT[4]	A/D Conversion Value Output Area - Output data range : -48 ~ 4047 or–2048 ~ 2047

4.2.3 Module Reading - Single Type

1) G3F-AD3A, G4F-AD3A

Single type of function block for reading the module is performed for only one channel and the specified channel is used to read output variable of data displayed from A/D conversion digital value.

Function block	I/O	Variable	Data type	Descriptions
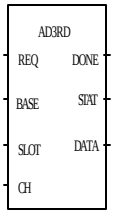	Input	REQ	BOOL	Function Block Execution Request Area - The execution of function block reading is requested in this area. - If the status to be connected with this area is satisfied on the program operation and input condition changes from low(0) to high(1), function block initialization for the module is executed.
		BASE	USINT	Base Module Location Number Area - The base No. on which A/D conversion module is mounted is written on this area. - Setting range : 0 ~ 3
		SLOT	USINT	Slot Location Number Area - The slot No. on which A/D conversion module is mounted is written on this area. - Setting range: 0 to 7
		CH	USINT	Available Channel Specification Area - Enabled channels are specified to 1 and disabled channels are specified to 0.
	output	DONE	BOOL	Function Block Execution Complete Area - When function block reading is executed with no error, 1 is written and until next execution, 1 is continuing. When error occurs, 0 is written and operation come to stop.
		STAT	USINT	Error Code Display Area - When error occurred during function block initialization, the error code number is written.
		DATA	INT	A/D Conversion Value Output Area Output data range : -47 ~ 4048

2) G6F-AD2A

Single type of function block for reading the module is performed for only one channel and the specified channel is used to read output variable of data displayed from A/D conversion digital value.

Function block	I/O	Variable	Data type	Descriptions
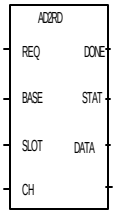	Input	REQ	BOOL	Function Block Execution Request Area - The execution of function block reading is requested in this area. - If input condition is changed from low(0) to high(1), function block initialization for the module is executed.
		BASE	USINT	Base Module Location Number Area - The base No. on which A/D conversion module is mounted is written on this area. - Setting range : 0
		SLOT	USINT	Slot Location Number Area - The slot No. on which A/D conversion module is mounted is written on this area. - Setting range: 0 to 7
		CH	BOOL[4]	Available Channel Specification Area Setting range : 0 ~ 3
	Output	DONE	BOOL	Function Block Execution Complete Area - When function block reading is executed with no error, 1 is written and 1 is kept until next execution. When error occurs, 0 is written and operation come to stop
		STAT	USINT	Error Code Display Area - When error occurs during function block reading, the error code number is written. - Error code is referred to Manual 4.3.
		DATA	INT[4]	A/D Conversion Value Output Area - Output data range : -48 ~ 4047 or –2048 ~ 2047

4.3 Remote Function Block

4.3.1 Module Initialization

1) G3F-AD3A, G4F-AD3A

Module Initialization function block is a program for the use in setting the location number of the slot on which the communication module of A/D conversion module of the master station is mounted, the address number of communication module which a remote I/O station has, the base location number, and the slot location number, and specifying the an available channel enable, a data type for A/D conversion, and average process data.

Function block	I/O	Variable	Data type	Descriptions
ADR3INI REQ NDR NET_NO ERR ST_NO STAT BASE ACT SLOT CH TYPE AVG_EN AVG_NUM	Input	REQ	BOOL	Function Block Execution Request Area on Rising Edge. - The execution of write function block is requested in this area. - If the status to be connected with this area is satisfied on the program operation and input condition changes from low(0) to high(1), function block initialization for the module is executed.
		NET_NO	USINT	The location number of the slot on which the transmission module of the master station is mounted. -Setting range: 0 to 7
		ST_NO	USINT	Station number of the communication module which a remote I/O station has. - Setting range : 0 to 63
		BASE	USINT	Base Location Number Area - The base No. on which A/D conversion module is mounted is written on this area. - Setting range : 0 to 3
		SLOT	USINT	Slot Location Number Area - The slot No. on which A/D conversion module is mounted is written on this area. - Setting range: 0 to 7
		CH	BOOL[8]	Available Channel Specification Area - Available channels are specified in this area. - Enabled channels are specified to 1 and disabled channels are specified to 0.
		TYPE	BOOL[8]	Output Data Type Specification Area - Output digital data type for each channel is specified in this area. - 0 is for the range of 1 ~ 5VDC and DC 4 ~ 20mA - 1 is for the range of 0 ~ 10VDC
		AVG_EN	BOOL[8]	Average Process Enable Specification Area - 1 is for the average processing. - 0 is for the sampling process.
		AVG_NUM	USINT[8]	Set a constant of the average processing of the number of times. - Setting range : 2 ~ 255
	Output	NDR	BOOL	When function block execution is completed with no error, 1 is written. During the scan which the execution condition has been made, 1 is continuing and at the next scan. 0 is written.
		ERR	BOOL	Error Data Display Area - When error occurs during function block initialization, 1 is written and the operation comes to stop. During the scan which the execution condition has been made, 1 is continuing and at the next scan, 0 is written.
		STAT	USINT	Error Code Display Area - When error occurs during function block initialization, the error code number is written.
		ACT	BOOL[8]	Channel Operation Display Area - The channel specified after executing the function block initialization with no error is right, 1 is written and, on the non-specified channel, 0 is written.

REMARK

BOOL[8] and USINT[8] of data type means that the number of element is 8, and also this means the whole number of channels and channel number.

2) G6F-AD2A

Module Initialization function block is a program for the use in setting the location number of the slot on which the communication module of A/D conversion module of the master station is mounted, the address number of communication module which a remote I/O station has, the base location number, and the slot location number, and specifying the an available channel enable, a data type for A/D conversion, and average process data.

Function block	I/O	Variable	Data type	Descriptions
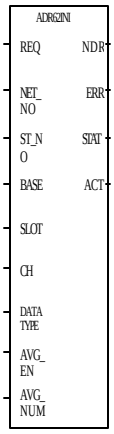	Input	REQ	BOOL	Function Block Execution Request Area on Rising Edge. - The execution of write function block is requested in this area. - If the status to be connected with this area is satisfied on the program operation and input condition changes from low(0) to high(1), function block initialization for the module is executed.
		NET_NO	USINT	The location number of the slot on which the transmission module of the master station is mounted. -Setting range: 0 to 7
		ST_NO	USINT	Station number of the communication module which a remote I/O station has. - Setting range : 0 to 63
		BASE	USINT	Base Location Number Area - The base No. on which A/D conversion module is mounted is written on this area. - Setting range : 0
		SLOT	USINT	Slot Location Number Area - The slot No. on which A/D conversion module is mounted is written on this area. - Setting range: 0 to 7
		CH	BOOL[4]	Available Channel Specification Area - Available channels are specified in this area. - Enabled channels are specified to 1 and disabled channels are specified to 0.
		DATA TYPE	BOOL[4]	Output Data Type Specification Area - Output digital data type for each channel is specified in this area. - 0 is for the r ange of –48 to 4047. - 1 is for the range of -2048 to 2047.
		AVG_EN	BOOL[4]	Average Process Enable Specification Area - 1 is for the average processing. - 0 is for the sampling process.
		AVG_NUM	USINT[4]	Set a constant of the average processing of the number of times. - Setting range : 2 ~ 255
	Output	NDR	BOOL	When function block execution is completed with no error, 1 is written. During the scan which the execution condition has been made, 1 is continuing and at the next scan. 0 is written.
		ERR	BOOL	Error Data Display Area - When error occurs during function block initialization, 1 is written and the operation comes to stop. During the scan which the execution condition has been made, 1 is continuing and at the next scan, 0 is written.
		STAT	USINT	Error Code Display Area - When error occurs during function block initialization, the error code number is written.
		ACT	BOOL[4]	Channel Operation Display Area - The channel specified after executing the function block initialization with no error is right, 1 is written and, on the non-specified channel, 0 is written.

REMARK

BOOL[4] and USINT[4] of data type means that the number of element is 4, and also this means the whole number of channels and channel number.

4.3.2 Module Reading

1) G3F-AD3A, G4F-AD3A

Function block for reading the module is performed for every channel in block and the specified channels are used to read output variable of data displayed from A/D conversion digital value.

Function block	I/O	Variable	Data type	Descriptions
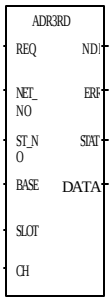	Input	REQ	BOOL	Function Block Execution Request Area - The execution of read function block is requested in this area. - If the status to be connected with this area is satisfied on the program operation and input condition changes from low(0) to high(1), function block reading for the module is executed.
		NET_NO	USINT	The location number of the slot on which the communication module of the master station is mounted. - Setting range: 0 to 7
		ST_NO	USINT	The station number of the communication module which a remote I/O station has. - Setting range : 0 to 63
		BASE	USINT	Base Module Location Number Area - The base No. on which A/D conversion module is mounted is written on this area. - Setting range : 0 to 3
		SLOT	USINT	Slot Location Number Area - The slot No. on which A/D conversion module is mounted is written on this area. - Setting range: 0 to 7
		CH	BOOL[8]	Available Channel Specification Area - Available channels are specified in this area. - Enabled channels are specified to 1 and disabled channels are specified to 0.
	Output	NDR	BOOL	When function block execution is completed with no error, 1 is written. During the scan which the execution condition has been made, 1 is continuing and at the next scan. 0 is written.
		ERR	BOOL	Error Data Display Area - When error occurs during the execution of function block reading, 1 is written and the operation comes to stop. During the scan which the execution condition has been made, 1 is continuing and at the next scan, 0 is written.
		STAT	USINT	Error Code Display Area - When error occurs during the execution of function block reading, the error code number is written.
		ACT	BOOL[8]	Channel Operation Display Area - The channel specified after executing the function block reading with no error is right, 1 is written and, on the non-specified channel, 0 is written.
		DATA	INT[8]	A/D Conversion Value Output Area - Output data range : -48 ~ 4047 or–2048 ~ 2047

REMARK

BOOL[8] and USINT[8] of data type means that the number of element is 8, and also this means the whole number of channels and channel number.

2) G6F-AD2A

Function block for reading the module is performed for every channel in block and the specified channels are used to read output variable of data displayed from A/D conversion digital value.

Function block	I/O	Variable	Data type	Descriptions
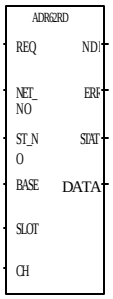	Input	REQ	BOOL	Function Block Execution Request Area - The execution of read function block is requested in this area. - If the status to be connected with this area is satisfied on the program operation and input condition changes from low(0) to high(1), function block reading for the module is executed.
		NET_NO	USINT	The location number of the slot on which the communication module of the master station is mounted. - Setting range: 0 to 7
		ST_NO	USINT	The station number of the communication module which a remote I/O station has. - Setting range : 0 to 63
		BASE	USINT	Base Module Location Number Area - The base No. on which A/D conversion module is mounted is written on this area. - Setting range : 0
		SLOT	USINT	Slot Location Number Area - The slot No. on which A/D conversion module is mounted is written on this area. - Setting range: 0 to 7
		CH	BOOL[4]	Available Channel Specification Area - Available channels are specified in this area. - Enabled channels are specified to 1 and disabled channels are specified to 0.
	Output	NDR	BOOL	When function block execution is completed with no error, 1 is written. During the scan which the execution condition has been made, 1 is continuing and at the next scan. 0 is written.
		ERR	BOOL	Error Data Display Area - When error occurs during the execution of function block reading, 1 is written and the operation comes to stop. During the scan which the execution condition has been made, 1 is continuing and atthe next scan, 0 is written.
		STAT	USINT	Error Code Display Area - When error occurs during the execution of function block reading, the error code number is written.
		ACT	BOOL[4]	Channel Operation Display Area - The channel specified after executing the function block reading with no error is right, 1 is written and, on the non-specified channel, 0 is written.
		DATA	INT[4]	A/D Conversion Value Output Area - Data output range : -48 ~ 4047

REMARK

BOOL[4] and USINT[4] of data type means that the number of element is 4, and also this means the whole number of channels and channel number.

4.4 Errors on Function Block

This shows errors and resolutions in accordance with them.

STAT No.	Local /Remote	Descriptions	Function block			Resolutions
			Initiali-za tion	Read		
				Array type	Single type	
0	Local	Operating with no fault	O	O	O	-
1		The base location number is exceeding the proper setting range	O	O	O	Correct the number in accordance with the proper range (See Section 4.2)
2		H/W error of the base	O	O	O	Contact the service station
3		The slot location number is exceeding the proper setting range	O	O	O	Set the right number to the slot loading the A/D conversion module
4		The A/D conversion module on the slot is empty	O	O	O	Load the A/D conversion module to the specified slot
5		The module loaded isn't the A/D module	O	O	O	Load the A/D conversion module to the specified slot
6		The channel number is exceeding the proper range	-	-	O	Specify the available channel correctly
7		H/W error of the A/D conversion module	O	O	O	Contact the service station
8		The A/D conversion module's shared memory error	O	O	O	Contact the service station
9		The available channels are not specified	-	O	O	Make a correct specification of the available channel on the initialize function block
17		Average number exceeding the proper range	O	-	-	Correct the value to the proper range (Number: 2 to 255)
128	Remote	H/W error of the communication module for remote	O	O	-	See the manual for the remote communication module
129		The base location number is exceeding the proper setting range	O	O		Correct the number in accordance with the proper range (See Section 4.3)
131		The slot location number is exceeding the proper setting range	O	O		Set the right number to the slot mounting the A/D conversion module
133		The module loaded isn't the A/D module	O	O		Mount the A/D conversion module to the specified slot
135		H/W error of the A/D conversion module	O	O		Contact the service station
136		The A/D conversion module's shared memory error	O	O		Contact the service station
137		The available channels are not specified	-	O		Make a correct specification of the available channel on the initializing function block
145		Average number exceeding the proper range	O	-		Correct the value to the proper range (Number: 2 to 255)

Chapter 5. GM PROGRAMMING

5.1 Programming for Distinction of A/D Conversion Value

1) System Configuration

GM3-PA1A	GM3-CPUA	G3F-AD3A	G3Q-RY4A

2) Initial Settings

(1) Available channel enable : channel 0, 2, 3
(2) Analog input : current input(DC 4 ~ 20 mA)
(3) Average processing setting : channel 2(100 times), channel 3(50 times)

3) Descriptions of the Program

(1) The digital value less than 2,000 of channel 0 turns %Q0.1.0 on.
(2) The digital value more than 3,600 of channel 2 turns %Q0.1.1 on.
(3) The digital value more than 2,000 or same, and less than 3,600 or same of channel 4 turns %Q0.1.2 on.
(4) The digital value of the same as 2,800 of channel 4 turns %Q0.1.3 on.

4) Programming Example

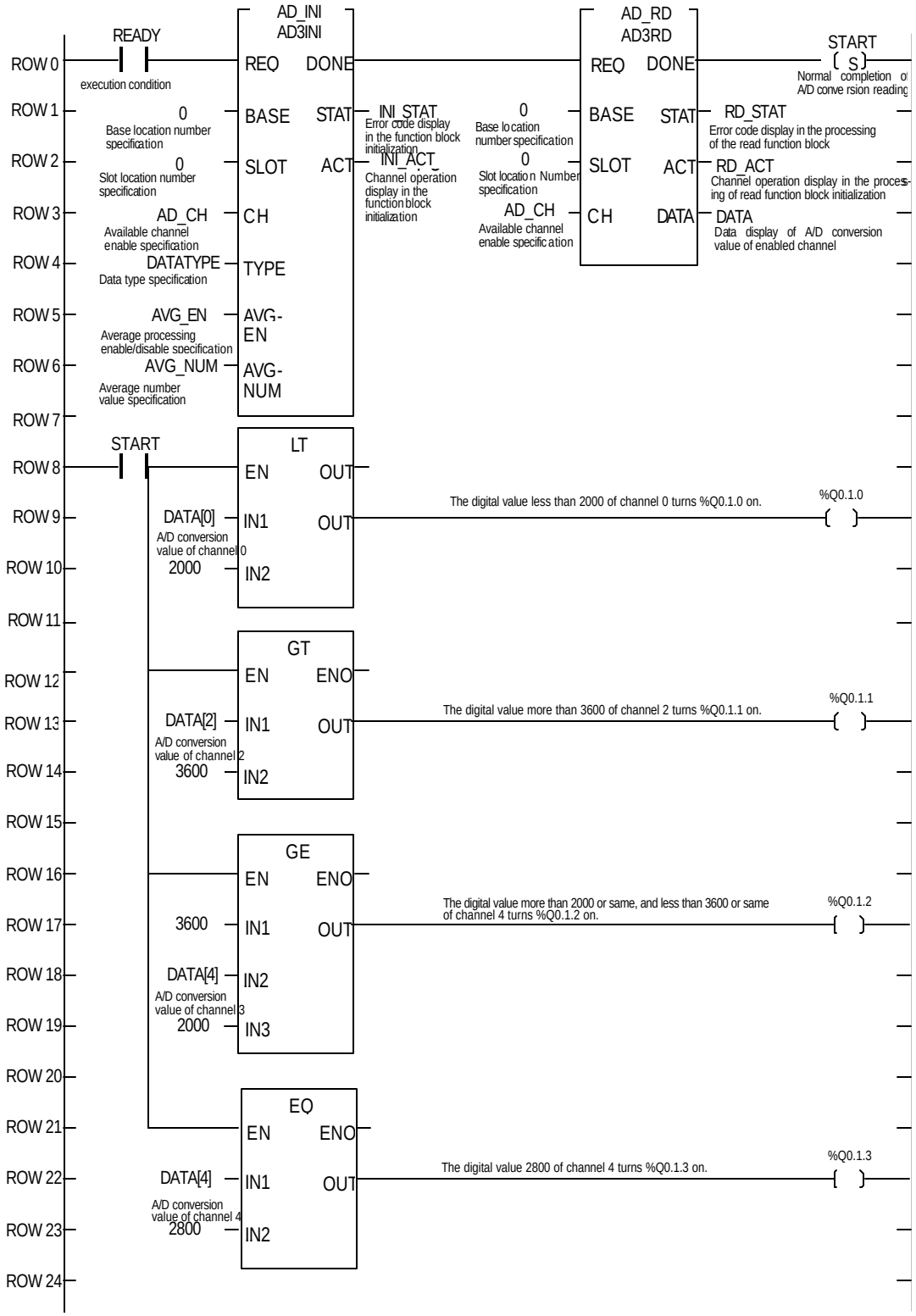

5) Specifying initial value of input/output variables on the program.(Specifying channels)

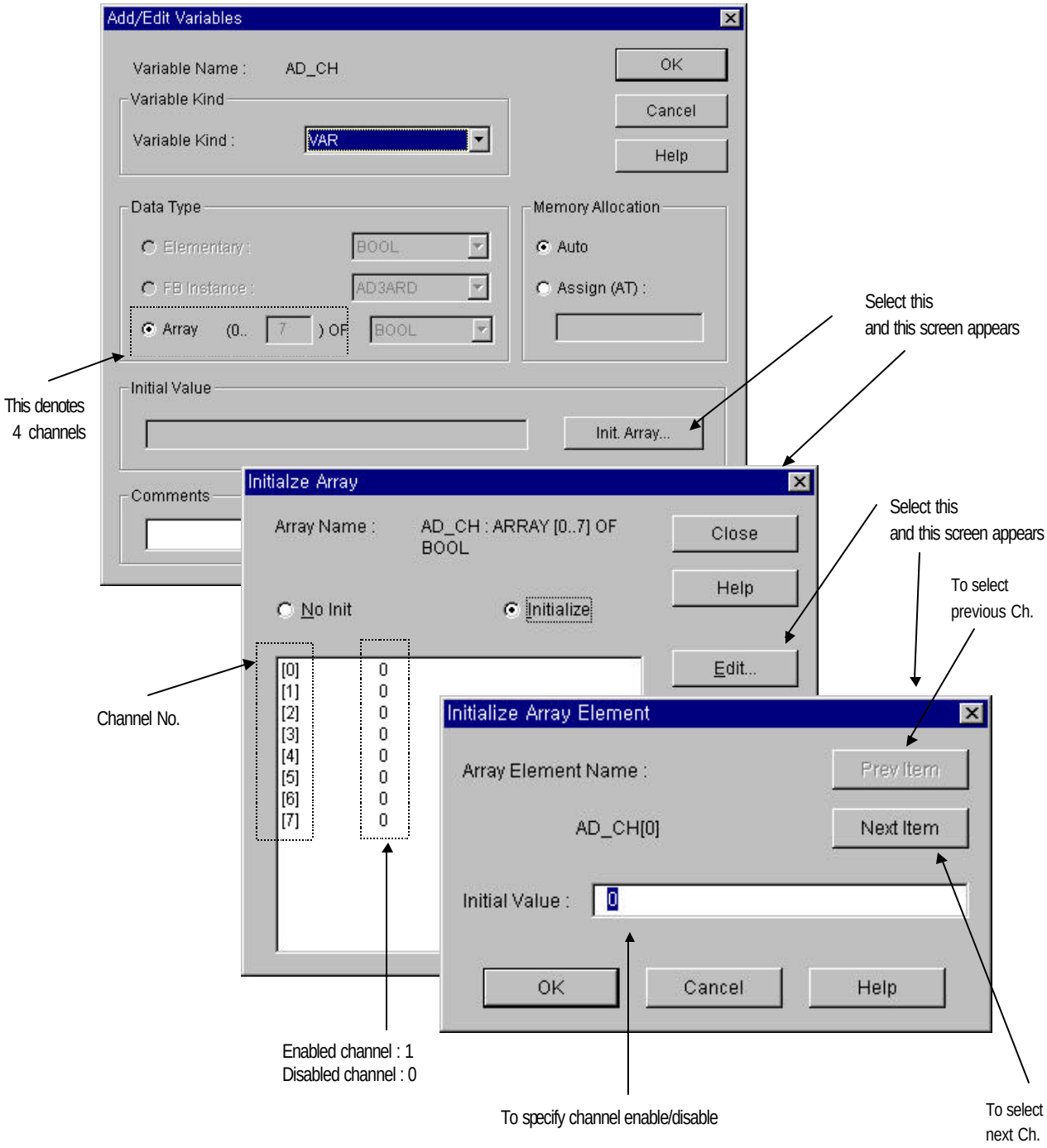

6) Input/output variables on Programming

Variable Name	Var_Kind	Data Type	(AT Address) (Initial Value)
AD_CH	: VAR	: ARRAY [0..7] OF BOOL	: = { 1,0,1,0,1,0,0,0,0 }
AD_INI	: VAR	: FB instance	
AD_RD	: VAR	: FB instance	
AVG_EN	: VAR	: ARRAY [0..7] OF BOOL	: = { 0,1,0,1,0,0,0,0 }
AVG_NUM	: VAR	: ARRAY [0..7] OF USINT	: = { 0,0,100,50,0,0,0,0 }
DATA	: VAR	: ARRAY [0..7] OF INT	
DATATYPE	: VAR	: ARRAY [0..7] OF BOOL	: = { 0,0,0,0,0,0,0,0 }
INI_ACT	: VAR	: ARRAY [0..7] OF BOOL	
INI_STAT	: VAR	: USINT	
RD_ACT	: VAR	: ARRAY [0..7] OF BOOL	
RD_STAT	: VAR	: USINT	
READY	: VAR	: BOOL	
START	: VAR	: BOOL	

5.2 Programming for Display of A/D Conversion Value and Error Code on BCD Display

1) System Configuration

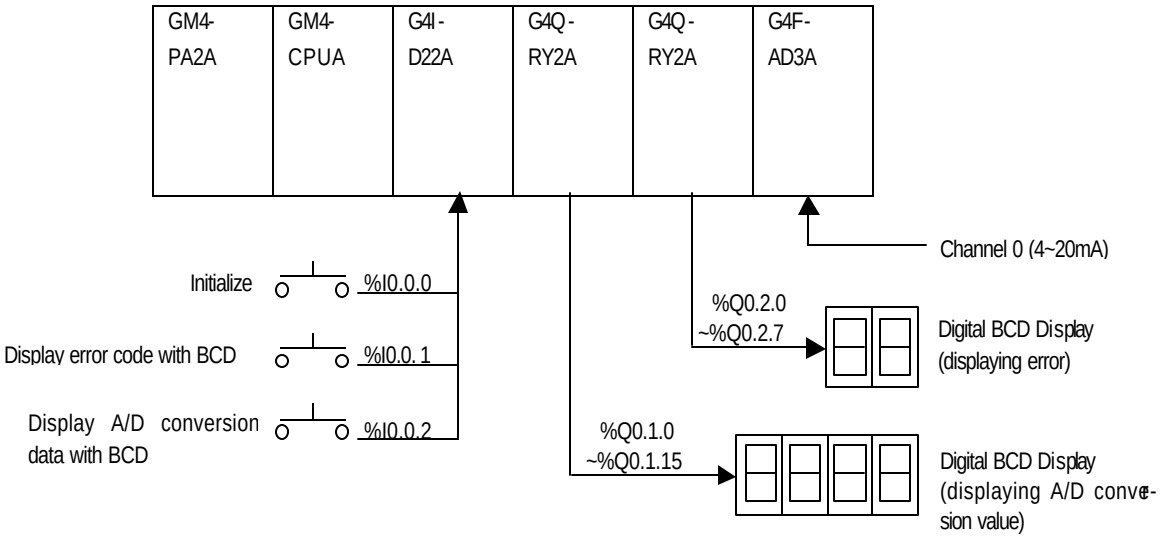

2) Initial Settings

(1) Available channel enabled : channel 0,

(2) Analog input : current input(DC 4 to 20 mA)

(3) Average processing setting : 10 times

3) Descriptions of the Program

(1) %I0.0.0 turning On leads to the initial setting of A/D conversion module.

(2) %I0.0.1 turning On leads to displaying A/D conversion value on the BCD display.(%Q0.1.0 to %Q0.1.15)

(3) %I0.0.2 turning On leads to displaying error code of function block on the BCD display, (%Q0.2.0 to %Q0.2.7)

4) Programming

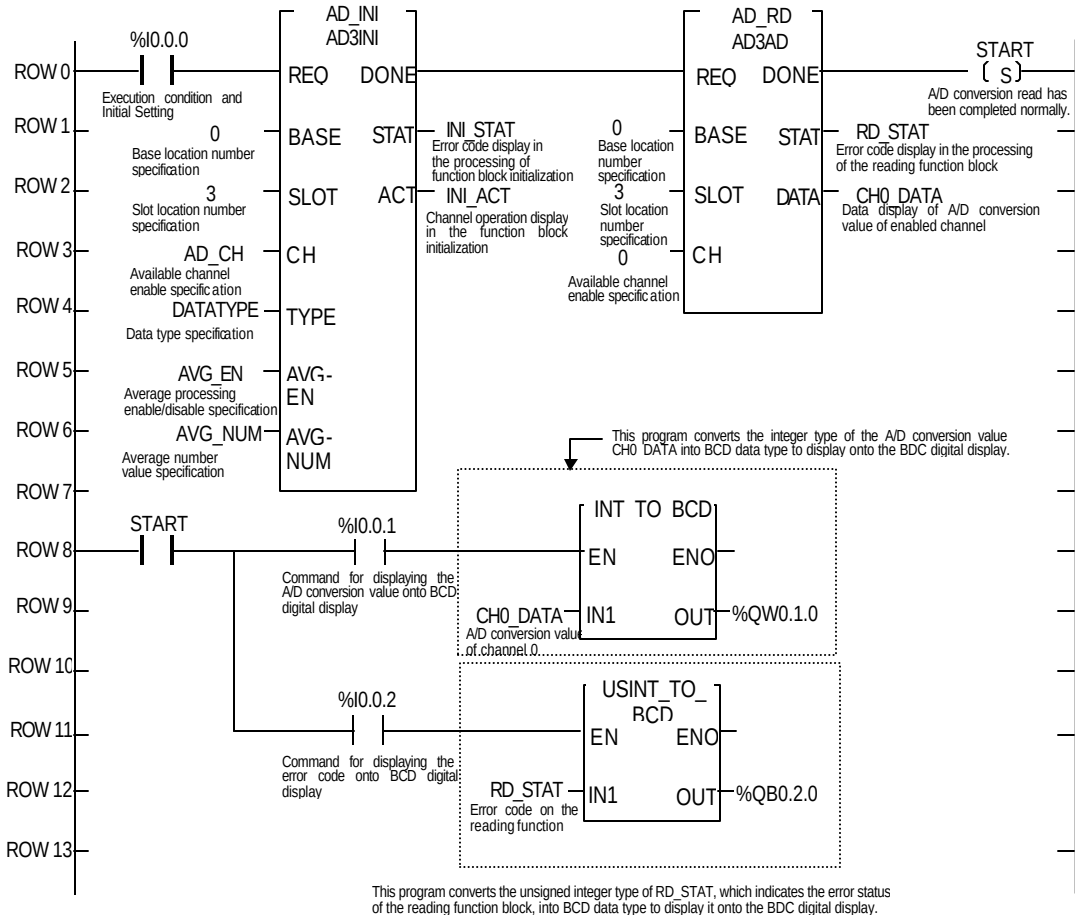

5) Input/output variables on the programming

Variable Name	Var Kind	Data Type	(AT Address) (Initial Value)
AD_CH	: VAR	: ARRAY [0..7] OF BOOL	: = {1,0,0,0,0,0,0,0}
AD_INI	: VAR	: FB Instance	
AD_RD	: VAR	: FB Instance	
AVG_EN	: VAR	: ARRAY [0..7] OF BOOL	: = {1,0,0,0,0,0,0,0}
CH0_DATA	: VAR	: INT	
DATA	: VAR	: DINT	
DATATYPE	: VAR	:ARRAY [0..7] OF BOOL	: = {0,0,0,0,0,0,0,0}
INI_ACT	: VAR	: ARRAY [0..7] OF BOOL	
INI_STAT	: VAR	: USINT	
AVG_NUM	: VAR	: ARRAY [0..7] OF UINT	: = {10,0,0,0,0,0,0,0}
RD_STAT	: VAR	: USINT	
START	: VAR	: BOOL	

5.3 Programming for Loading the A/D Conversion Module on Remote I/O Station

1) System Configuration

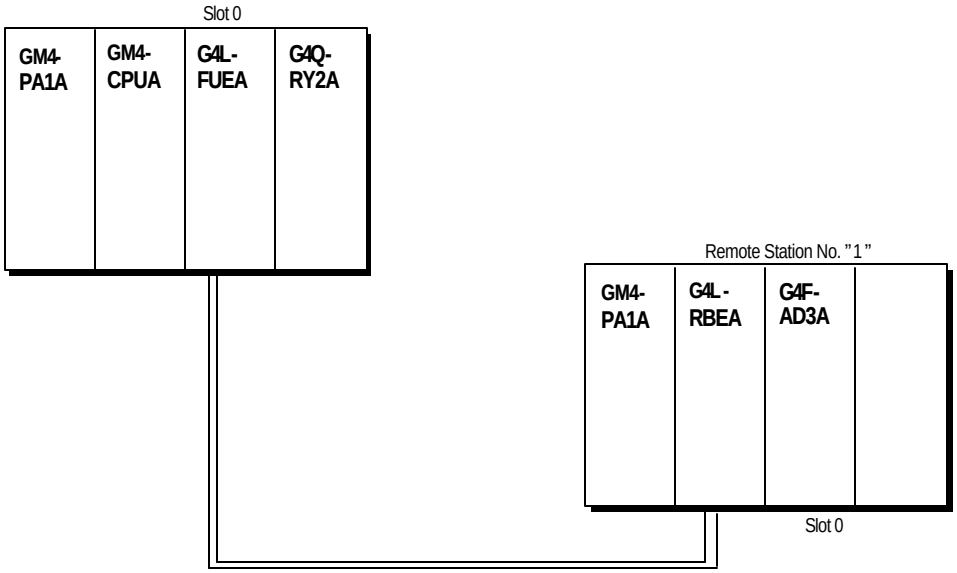

2) Initial Settings

(1) A/D conversion enabling channel: channel 0

(2) Conversion data range: DC 4~20mA

(3) Average processing setting: channel 0(setting value: 50 times)

3) Descriptions of the Program

(1)The digital value less than 2000of channel 0 turns % Q0.1.0 on.

(2)The digital value more than 2000 or same, and less than 10,000 or same of channel 0 turns %Q0.1.1 on.

(3)The digital value more than 3,000 or same, and less than 12,000 of channel 0 turns %Q0.1.2 on.

(4)The digital value more than 4,000 or same of channel 0 turns %Q0.1.3 on.

4) Programming example

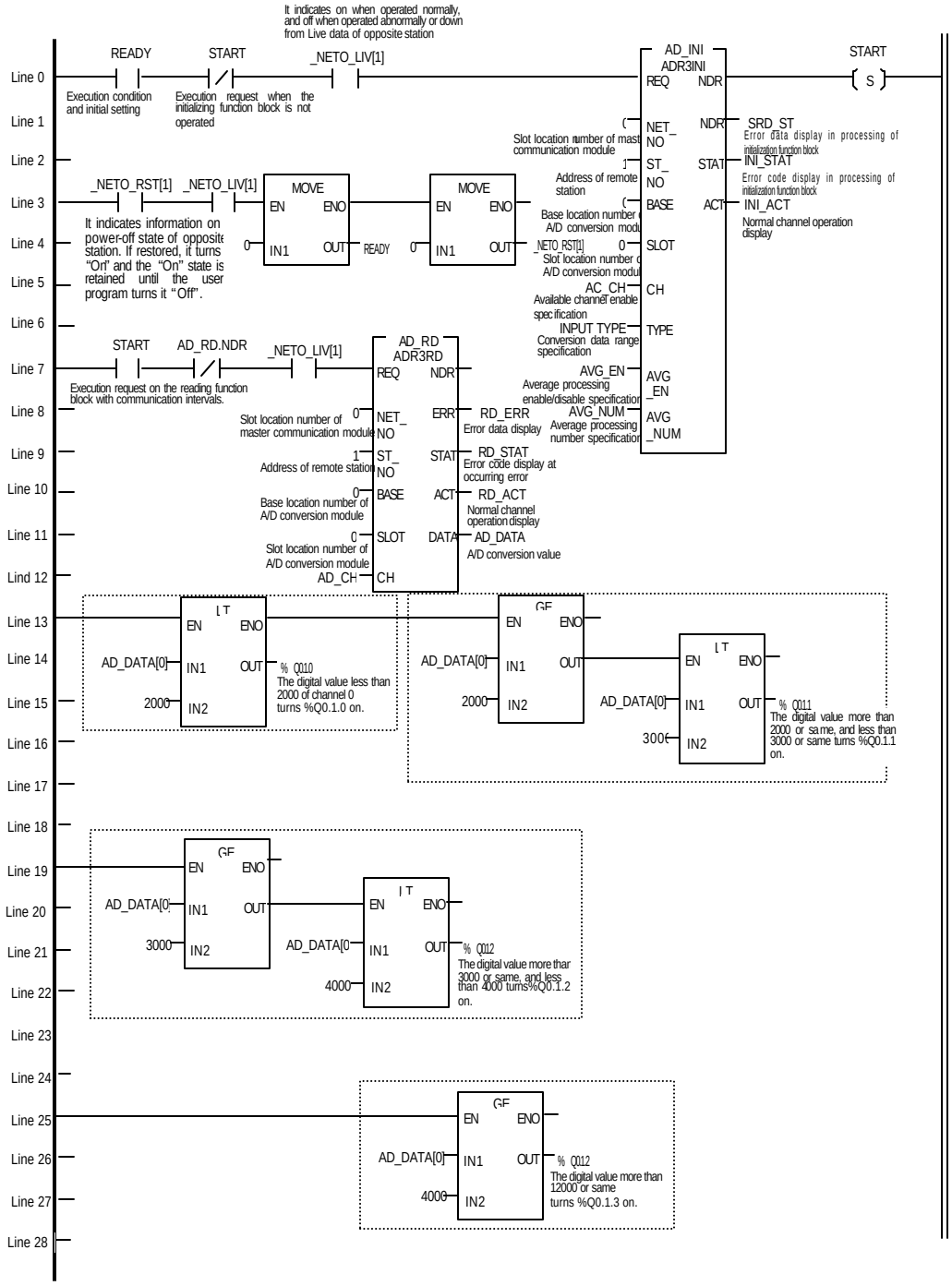

5) Input/output variables used on the programming

Variable Name	Var Kind	Data Type	(AT Address) (Initial Value)
AD_CH	: VAR	: ARRAY [0..7] OF BOOL	: = {0,0,0,0,0,0,0,0}
AD_DATA	: VAR	: ARRAY [0..7] OF INT	
AD_INI	: VAR	: FB Instance	
AD_RD	: VAR	: FB Instance	
AVG_EN	: VAR	: ARRAY [0..7] OF BOOL	: = {1,0,0,0,0,0,0,0}
AVG_SEL	: VAR	: ARRAY [0..7] OF BOOL	: = {1,0,0,0,0,0,0,0}
INPUTTYPE	: VAR	:ARRAY [0..7] OF BOOL	: = {0,0,0,0,0,0,0,0}
INI_ACT	: VAR	: ARRAY [0..7] OF BOOL	
INI_ERR	: VAR	: BOOL	
INI_STAT	: VAR	: USINT	
AVG_NUM	: VAR	: ARRAY [0..7] OF UINT	: = {50,0,0,0,0,0,0,0}
RD_STAT	: VAR	: ARRAY [0..7] OF BOOL	
RD_ERR	: VAR	: BOOL	
RD_STAT	: VAR	: USINT	
READY	: VAR	: BOOL	

6 Buffer memory

The A/D module has buffer memory used for data exchange with CPU module. This chapter describes the configuration and contents of buffer memory.

6.1 The configuration of buffer memory

6.1.1 G6F-AD2A

Address (decimal)	Name	Description	Default value	Remark
00	Channel enable	Enable / disable channel operation	h00	R / W[1]
01	Output data range	Assign the range of digital output value	h00	R / W
02	Average count processing enable	Enable / disable average count processing per each channel	h00	R / W
03	Avg. count of Ch0	Assign the count of Avg. processing of Ch0	h02	R / W
04	Avg. count of Ch1	Assign the count of Avg. processing of Ch1	h02	R / W
05	Avg. count of Ch2	Assign the count of Avg. processing of Ch2	h02	R / W
06	Avg. count of Ch3	Assign the count of Avg. processing of Ch3	h02	R / W
07	Data enable	Make enable the new setting of buffer 0 ~ 6	h00	R / W
08	Ch0 digital output value	Digital output value of channel 0	-	R[2]
09	Ch1 digital output value	Digital output value of channel 1	-	R
10	Ch2 digital output value	Digital output value of channel 2	-	R
11	Ch3 digital output value	Digital output value of channel 3	-	R
12	Channel status	Indicate run/stop of each channel	-	R
13	Ch0 error code	Shows error code when an error occurred on channel 0	-	R
14	Ch1 error code	Shows error code when an error occurred on channel 1	-	R
15	Ch2 error code	Shows error code when an error occurred on channel 2	-	R
16	Ch3 error code	Shows error code when an error occurred on channel 3	-	R

* All 16-bit data

[1] R/W : Read and write are both available
[2] R : Read only

6.1.2 G3F-AD3A / G4F-AD3A

The buffer memory of G3F-AD3A and G4F-AD3A has same configuration.

Address (decimal)	Name	Description	Default value	Remark
00	Channel enable	Enable / disable channel operation	h00	R / W
01	Input voltage / current type	Assign the type of analog input voltage / current	h00	R / W
02	Average count processing enable	Enable / disable average count processing per each channel	h00	R / W
03	Avg. count of Ch0	Assign the count of Avg. processing of Ch0	h02	R / W
04	Avg. count of Ch1	Assign the count of Avg. processing of Ch1	h02	R / W
05	Avg. count of Ch2	Assign the count of Avg. processing of Ch2	h02	R / W
06	Avg. count of Ch3	Assign the count of Avg. processing of Ch3	h02	R / W
07	Avg. count of Ch4	Assign the count of Avg. processing of Ch4	h02	R / W
08	Avg. count of Ch5	Assign the count of Avg. processing of Ch5	h02	R / W
09	Avg. count of Ch6	Assign the count of Avg. processing of Ch6	h02	R / W
10	Avg. count of Ch7	Assign the count of Avg. processing of Ch7	h02	R / W
11	Data enable	Make enable the new setting of buffer 0~10	h00	R / W
12	Ch0 digital output value	Digital output value of channel 0	-	R
13	Ch1 digital output value	Digital output value of channel 1	-	R
14	Ch2 digital output value	Digital output value of channel 2	-	R
15	Ch3 digital output value	Digital output value of channel 3	-	R
16	Ch4 digital output value	Digital output value of channel 4	-	R
17	Ch5 digital output value	Digital output value of channel 5	-	R
18	Ch6 digital output value	Digital output value of channel 6	-	R
19	Ch7 digital output value	Digital output value of channel 7	-	R
20	Channel status	Indicate run/stop of each channel	-	R
21	Ch0 error code	Shows error code when an error occurred on channel 0	-	R
22	Ch1 error code	Shows error code when an error occurred on channel 1	-	R
23	Ch2 error code	Shows error code when an error occurred on channel 2	-	R
24	Ch3 error code	Shows error code when an error occurred on channel 3	-	R
25	Ch4 error code	Shows error code when an error occurred on channel 4	-	R
26	Ch5 error code	Shows error code when an error occurred on channel 5	-	R
27	Ch6 error code	Shows error code when an error occurred on channel 6	-	R
28	Ch7 error code	Shows error code when an error occurred on channel 7	-	R

* All 16-bit data

6.2 The Contents and description of buffer memory

6.2.1 G6F-AD2A

1) Channel enable (Address 00)

- When the power is on, all bits are set as 0 (off) and all channels are disabled.

- In order to enable a channel, set the corresponding bit as 1 (on). For example, turn on the bit 2 to enable the channel 2.

- Because the conversion time depends on the number of used channel, turning on just necessary channel can reduce A/D conversion time.

bit15	bit14	bit13	bit12	bit11	bit10	bit9	bit8	bit7	bit6	bit5	bit4	bit3	bit2	bit1	bit0
–	–	–	–	–	–	–	–	–	–	–	–	Ch3	Ch2	Ch1	Ch0

Ignored

Channel enable
0 : A/D conversion disable
1 : A/D conversion enable

Example) To enable channel 1 and 2 :

Write h0006 (turn on bit 1 and 2) to buffer 00, and sampling time is obtained as 2 ×5ms = 10ms.

2) Output data range (Address 01)

- Only G6F-AD2A has the function of selecting the range of digital output data. (It is not available with G3F-AD3A and G4F-AD3A).

- Each channel can be set independently.

- Turn on the corresponding bit as ‘1’ to set the output data range as -2048 ~ 2047. The default value is ‘0’ (-48 ~ 4047).

bit15	bit14	bit13	bit12	bit11	bit10	bit9	bit8	bit7	bit6	bit5	bit4	bit3	bit2	bit1	bit0
–	–	–	–	–	–	–	–	–	–	–	–	Ch3	Ch2	Ch1	Ch0

Ignored

Assign the output data range
0 : -48 ~ 4047
1 : -2048 ~ 2047

3) Average processing enable (Address 02)

- To use the average processing, set the corresponding bit as ‘ 1’ .

- The default value is 0 (sampling processing).

bit15	bit14	bit13	bit12	bit11	bit10	bit9	bit8	bit7	bit6	bit5	bit4	bit3	bit2	bit1	bit0
–	–	–	–	–	–	–	–	–	–	–	–	Ch3	Ch2	Ch1	Ch0

Ignored

average processing enable
0 : sampling processing
1 : average processing

4) Averaging count (Address 03 ~ 06)

- Assign the number of count that is used for the calculation of average value.

- Each channel can be set with different values.

- If the channel is not designated as average processing in address 02, the setting of averaging count is ignored.

Address	Description
03	The number of averaging count of channel0.
04	The number of averaging count of channel 1.
05	The number of averaging count of channel 2.
06	The number of averaging count of channel 3.

5) Data enable (Address 07)

- By turning on the bit 0 of address 07, the contents of address 00 ~ 06 are validated.

- While the bit 0 of address 07 is off, the A/D module operates according to the previous value of address 00 ~ 06 (channel enable, average processing enable, etc.) even if the contents of address 00 ~ 06 is changed by CPU module.

bit15	bit14	bit13	bit12	bit11	bit10	bit9	bit8	bit7	bit6	bit5	bit4	bit3	bit2	bit1	bit0
–	–	–	–	–	–	–	–	–	–	–	–	–	–	–	DE

Ignored

Data enable
0 : Ignore new data
1 : Validate new data

6) Digital output value (Address 08 ~ 11)

- The digital value converted from analog input value is stored at this area.

- If an error occurs, the d igital output value keeps the previous value.

Address	Description
08	The digital output value of channel 0
09	The digital output value of channel 1
10	The digital output value of channel 2
11	The digital output value of channel 3

7) Channel status (Address 12)

- Indicates a channel is operating or not by turning on/off the corresponding bit.

bit15	bit14	bit13	bit12	bit11	bit10	bit9	bit8	bit7	bit6	bit5	bit4	bit3	bit2	bit1	bit0
–	–	–	–	–	–	–	–	–	–	–	–	Ch3	Ch2	Ch1	Ch0

Ignored

Channel status
0 : Not operating
1 : Operating

8) Error code (Address 13 ~ 16)

- Shows an error code when an error occurred.

Error code	Description
h00	No error
h11	The averaging count setting error

6.2.2 G3F-AD3A / G4F-AD3A

1) Channel enable (Address 00)

- When the power is on, all bits are set as 0 (off) and all channels are disabled.

- In order to enable a channel, set the corresponding bit as 1 (on). For example, turn on the bit 2 to enable the channel 2.

- Because the conversion time depends on the number of used channel, turning on just necessary channel can reduce A/D conversion time.

bit15	bit14	bit13	bit12	bit11	bit10	bit9	bit8	bit7	bit6	bit5	bit4	bit3	bit2	bit1	bit0
–	–	–	–	–	–	–	–	Ch7	Ch6	Ch5	Ch4	Ch3	Ch2	Ch1	Ch0
Ignored								Channel enable 0 : A/D conversion disable 1 : A/D conversion enable							

Example) To enable channel 1, 2, and 3 for G4F-AD3A :

Write h000D (turn on bit 1, 2, and 3) to buffer 00, and sampling time is obtained as 3 ×5ms = 15ms.

2) Input voltage/current type (Address 01)

- This function is available with G3F-AD3A and G4F-AD3A. With the G6F-AD2A, the input voltage/current type isn't set by sequence program.

- Turn on the corresponding bit as '1' to set the input voltage/current type as 0 ~ 10 VDC. The default value is '0' (1 ~ 5 VDC and DC4~20mA).

- When use current input, be sure to set the corresponding bit as '0'. Otherwise, the module will not operate normally.

bit15	bit14	bit13	bit12	bit11	bit10	bit9	bit8	bit7	bit6	bit5	bit4	bit3	bit2	bit1	bit0
–	–	–	–	–	–	–	–	Ch7	Ch6	Ch5	Ch4	Ch3	Ch2	Ch1	Ch0
Ignored								Assign input voltage range 0 : 1 ~ 5 VDC and DC4~20mA 1 : 0 ~ 10 VDC							

3) Average processing enable (Address 02)

- To use the average processing, set the corresponding bit as ‘ 1’ .

- The default value is 0 (sampling processing).

bit15	bit14	bit13	bit12	bit11	bit10	bit9	bit8	bit7	bit6	bit5	bit4	bit3	bit2	bit1	bit0
–	–	–	–	–	–	–	–	Ch7	Ch6	Ch5	Ch4	Ch3	Ch2	Ch1	Ch0

Ignored

average processing enable
0 : sampling processing
1 : average processing

4) Averaging count (Address 03 ~ 10)

- Assign the number of count that is used for the calculation of average value.

- Each channel can be set with different values.

- If the channel is not designated as average processing in address 02, the setting of averaging count is ignored.

Address	Description
03	The number of averaging count of channel 0.
04	The number of averaging count of channel 1.
05	The number of averaging count of channel 2.
06	The number of averaging count of channel 3.
07	The number of averaging count of channel 4.
08	The number of averaging count of channel 5.
09	The number of averaging count of channel 6.
10	The number of averaging count of channel 7.

5) Data enable (Address 11)

- By turning on the bit 0 of address 07, the contents of address 00 ~ 06 are validated.

- While the bit 0 of address 11 is off, the A/D module operates according to the previous value of address 00 ~ 10 (channel enable, average processing enable, etc.) even if the contents of address 00 ~ 10 is changed by CPU module.

bit15	bit14	bit13	bit12	bit11	bit10	bit9	bit8	bit7	bit6	bit5	bit4	bit3	bit2	bit1	bit0
–	–	–	–	–	–	–	–	–	–	–	–	–	–	–	DE

Ignored

Data enable
0 : Ignore new data
1 : Validate new data

6) Digital output value (Address 12 ~ 19)

- The digital value converted from analog input value is stored at this area.

- If an error occurs, the digital output value keeps the previous value.

Address	Description
12	The digital output value of channel 0
13	The digital output value of channel 1
14	The digital output value of channel 2
15	The digital output value of channel 3
16	The digital output value of channel 4
17	The digital output value of channel 5
18	The digital output value of channel 6
19	The digital output value of channel 7

7) Channel status (Address 20)

- Indicates a channel is operating or not by turning on/off the corresponding bit.

bit15	bit14	bit13	bit12	bit11	bit10	bit9	bit8	bit7	bit6	bit5	bit4	bit3	bit2	bit1	bit0
–	–	–	–	–	–	–	–	Ch7	Ch6	Ch5	Ch4	Ch3	Ch2	Ch1	Ch0

Ignored

Channel status
0 : Not operating
1 : Operating

8) Error code (Address 21 ~ 28)

- Shows an error code when an error occurred.

Error code	Description
h00	No error
h11	The averaging count setting error

7 Buffer read/write instructions

7.1 Buffer read instructions

7.1.1 GET / GETP instruction

GET, GETP	FUN(230) GET FUN(231) GETP	Applicable CPU	K200S K300S K1000S

Instructions		Available devices											Steps	Flag		
		M	P	K	L	F	T	C	S	D	#D	Integer		Error (F110)	Zero (F111)	Carry (F112)
GET GETP	n1											○	9	○		
	S											○				
	D	○	○	○	○*		○	○		○	○					
	n2											○				

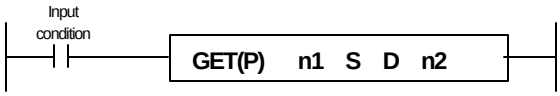

Operand setting

n1	Slot number at which A/D module is mounted
S	Start address of buffer memory to be read
D	Start address of CPU memory at which read data is stored
n2	Number of word to be read

* Available only when do not use computer link module or data link module

1) Functions

- Reads the data of 'n2' words, which start at the address specified as 'S' of buffer memory inside the special module mounted at the slot 'n1', and stores the data into the memory of CPU which begin with the device specified as 'D'.

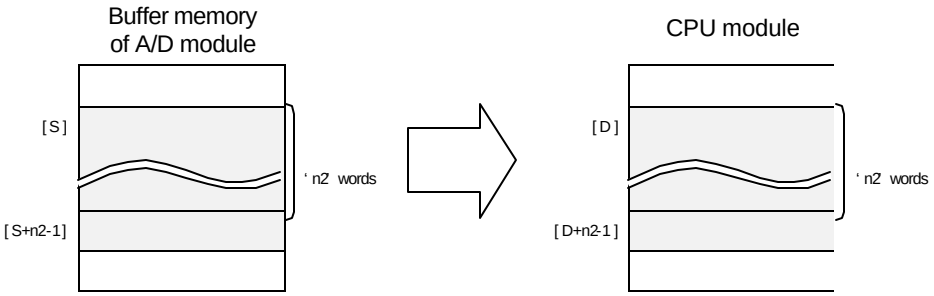

- In the following cases, operation error occurs;

  a) Special function module is not founded at the slot number specified at ‘ n1’

  b) The value of ‘ n2’ is greater than 512, or [D + n2] is exceeds the range of specified device.

- Execution conditions

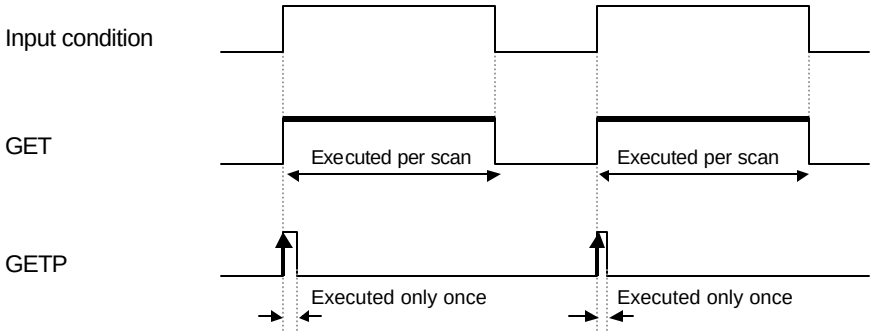

2) Program example

- Program that reads address 14, 15 of buffer memory of the A/D module (G4F-AD3A) mounted at the slot 3, and stores them to the D0014, D0015 of CPU module.

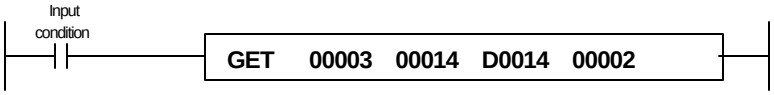

- Program that reads address 09, 10 of buffer memory of the A/D module (G6F-AD2A) mounted at the slot 3, and stores them to the D0014, D0015 of CPU module.

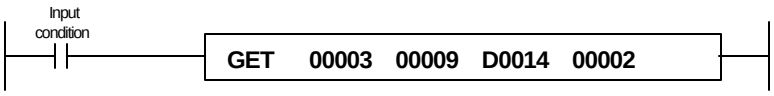

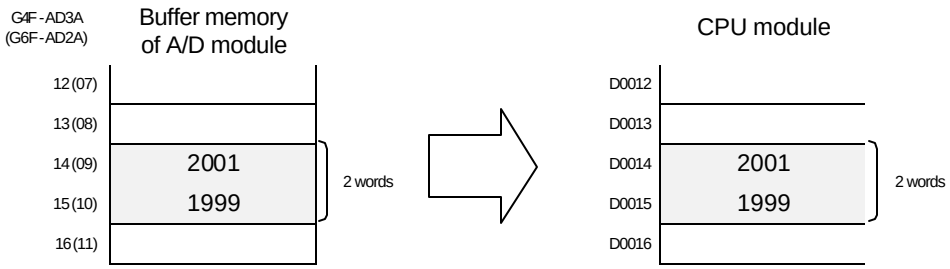

7.1.2 RGET instructions

RGET	FUN(232) RGET

Applicable CPU	K200S K300S K1000S

Instructions		Available devices											Steps	Flag		
		M	P	K	L	F	T	C	S	D	#D	Integer		Error (F110)	Zero (F111)	Carry (F112)
RGET	sl											○	13	○		
	st											○				
	D	○	○	○	○*		○	○		○	○					
	S											○				
	n									○		○				
	SS	○	○	○	○*		○	○		○	○					

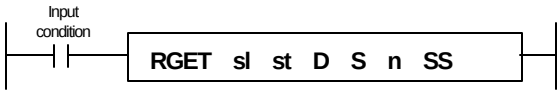

Operand setting

sl	Upper byte	Type of remote special function module	S	Start address of buffer memory of A/D module of remote station
	Lower byte	Slot number of Fnet module of self-station		
st	Upper byte	Slot number of remote special function module	n	Number of words to be read
	Lower byte	Station number of Fnet remote module		
D	Start address of destination device of self-station		SS	Device at which the link status is stored

* Available only when do not use computer link module or data link module

1) Functions

- Reads the data of 'n2' words, which starts at the address specified as 'S' of buffer memory inside the special function module of remote station (station number & slot number is specified as 'st') through the Fnet communication module (the slot number is specified as 'sl'), and stores the data into devices which begin with the device specified as 'D'. Then stores the link status into the device specified as 'SS' of self-station.

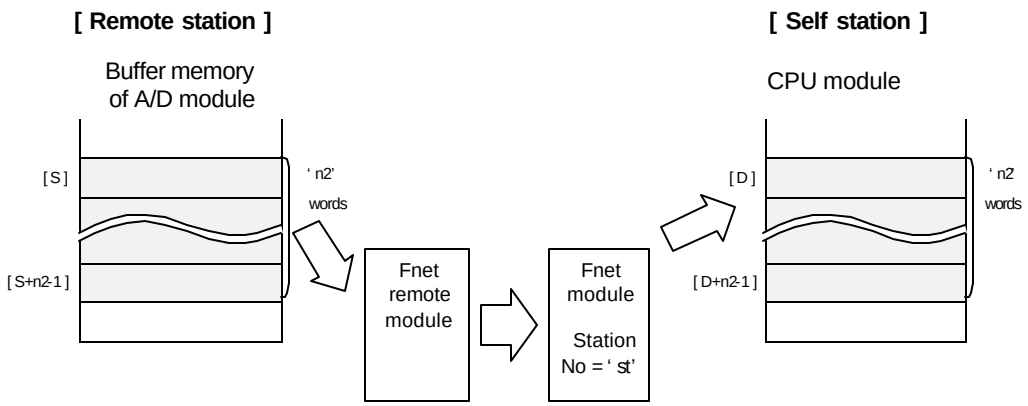

- Code of remote special function modules are as followings;

Module	Code
G3F-AD3A	h40
G4F-AD3A	hC0
G6F-AD2A	h02

(For the codes of other special function modules, please refer the user's manual of the related special function module)

- An operation error occurs when [S + n2 – 1] or [D + n2 – 1] is exceeds the range of specified device.

- Execution conditions

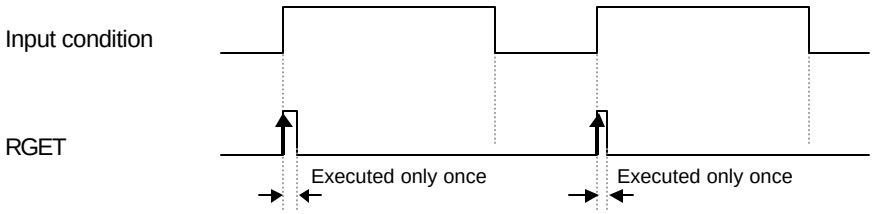

2) Program example

- Program that reads 8 words, through the Fnet module mounted at the slot 03, from the address 11 of the buffer memory of the G3F-AD3A module mounted at the slot 01 of remote station h1D. Then, stores the read data to the 8 words which begin with D0300 of self-station. The link status will be stored at M020 of self-station.

[System configuration]

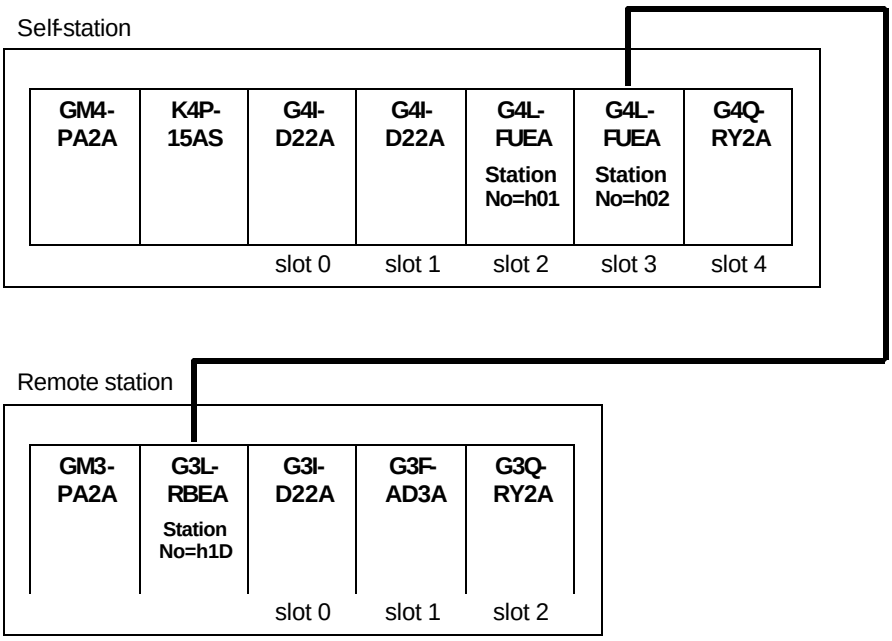

[Example program]

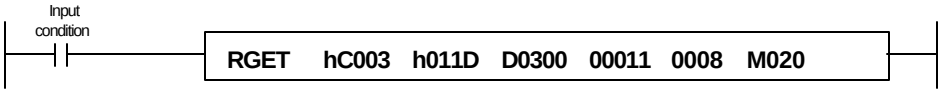

'**sl**' : upper byte → the code of remote module is hC0
lower byte → slot number of Fnet module of self station is h03

'**st**' : upper byte → slot number of remote A/D module is h01
lower byte → the station number of remote station is h1D

7.2 Buffer write instructions

7.2.1 PUT / PUTP instructions

PUT, PUTP	FUN(234) PUT FUN(235) PUTP	Applicable CPU	K200S K300S K1000S

Instructions		Available devices											Steps	Flag		
		M	P	K	L	F	T	C	S	D	#D	Integer		Error (F110)	Zero (F111)	Carry (F112)
PUT PUTP	n1											○	9	○		
	S											○				
	D	○	○	○	○*		○	○		○	○					
	n2											○				

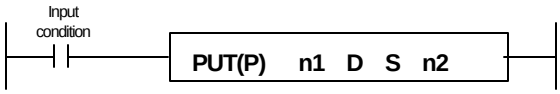

Operand setting

n1	Slot number at which A/D module is mounted
D	Start address of buffer memory at which data will be written
D	Start address of source data of CPU module
n2	Number of word to be written

* Available only when do not use computer link module or data link module

1) Functions

Write the data of 'n2' words, which start at the address specified as 'S' of CPU, and transfer the data into the block starting at the address specified as 'D' of buffer memory inside the A/D module mounted at the slot number 'n1'.

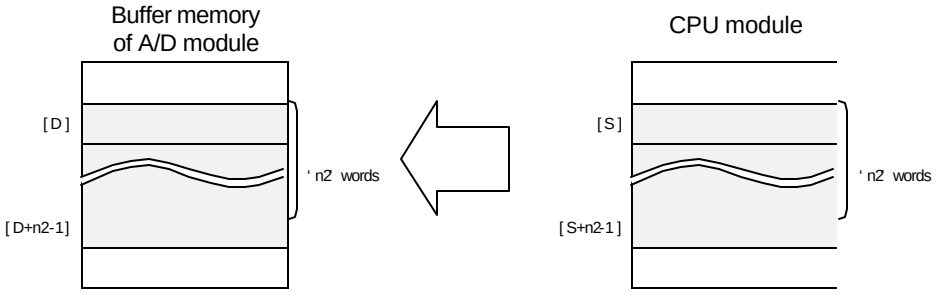

- In the following cases, operation error occurs;

  a) Special function module is not founded at the slot number specified at ‘ n1’

  b) The value of ‘ n2’ is greater than 512, or [D + n2] is exceeds the range of specified device.

- Execution conditions

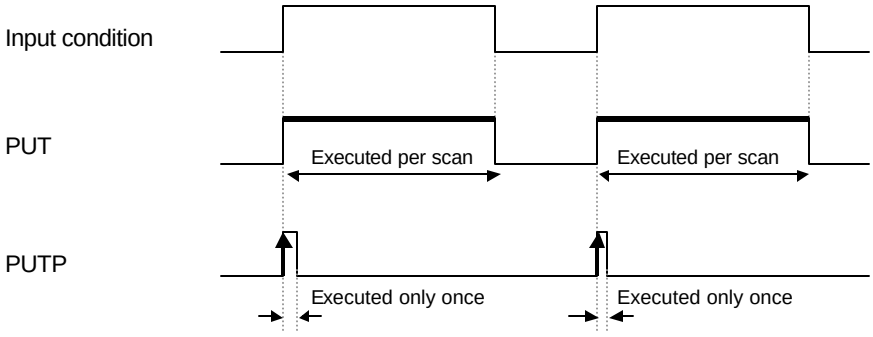

2) Program example

- Program that write 3 words of D0049 ~ D0051 of CPU module to the address 02 ~ 04 of buffer memory of the A/D module mounted at the slot 3.

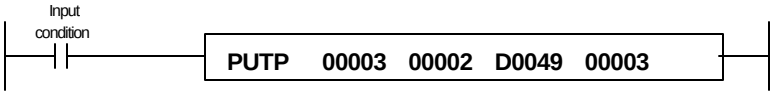

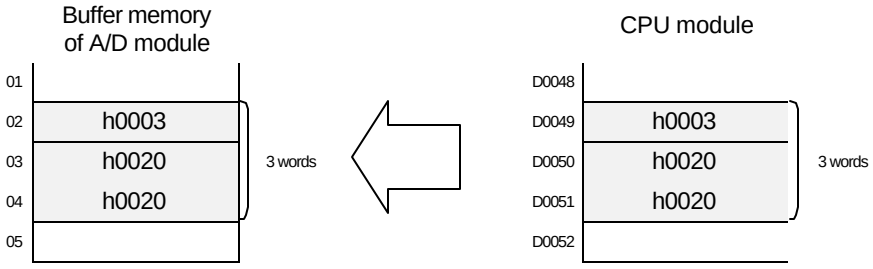

7.2.2 RPUT instructions

RPUT	FUN(233) RPUT	Applicable CPU	K200S K300S K1000S

Instructions		Available devices											Steps	Flag		
		M	P	K	L	F	T	C	S	D	#D	Integer		Error (F110)	Zero (F111)	Carry (F112)
RPUT	sl											○	13	○		
	st											○				
	S											○				
	D	○	○	○	○*		○	○		○	○					
	n									○		○				
	SS	○	○	○	○*		○	○		○	○					

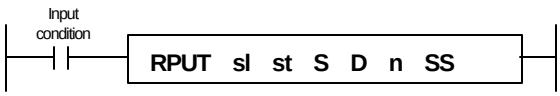

Operand setting

sl	Upper byte	Type of remote special function module	D	Start address of buffer memory of A/D module of remote station
	Lower byte	Slot number of Fnet module of self-station		
st	Upper byte	Slot number of remote special function module	n	Number of words to be read
	Lower byte	Station number of Fnet remote module		
S	Start address of device at which source data is stored (self-station)		SS	Device at which the link status is stored

* Available only when do not use computer link module or data link module

1) Functions

- Write the data of 'n' words which start at the device specified as 'S' to the block which begin with the address specified as 'D' of buffer memory inside the special function module of remote station. (station number & slot number is specified as 'st') through the Fnet communication module. Then stores the link status into the device specified as 'SS' of self-station.

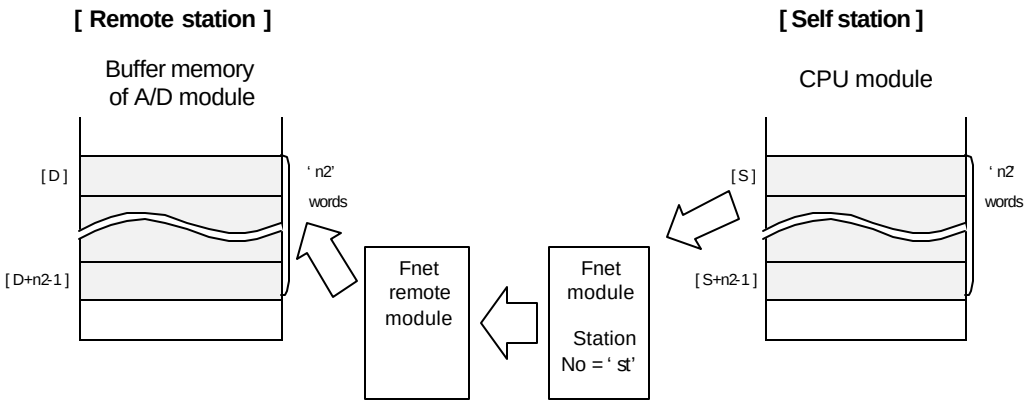

- Code of remote special function modules are as followings;

Module	Code
G3F-AD3A	h40
G4F-AD3A	hC0
G6F-AD2A	h02

(For the codes of other special function modules, please refer the user' s manual of the related special function module)

- An operation error occurs when [S + n2 – 1] or [D + n2 – 1] is exceeds the range of specified device.

- Execution conditions

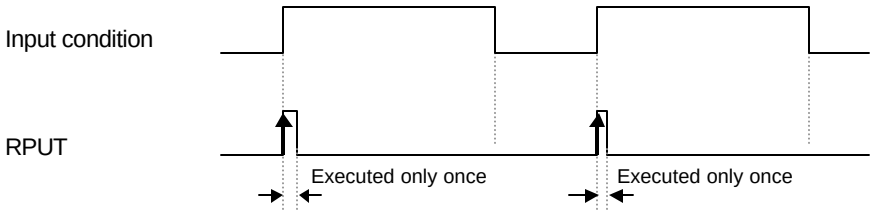

2) Program example

- Program that write 10 words, through the Fnet module mounted at the slot 02, from the D0200 ~ D0209 of self station to the address 11~20 of the buffer memory of the G3F-AD3A module mounted at the slot 02 of remote station h0E. The link status will be stored at M020 of self station.

[System configuration]

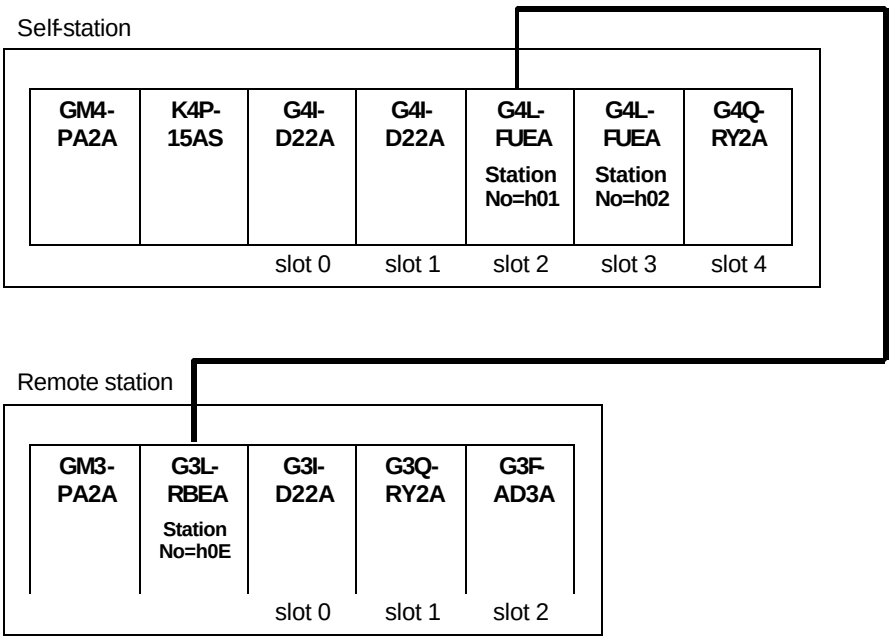

[Example program]

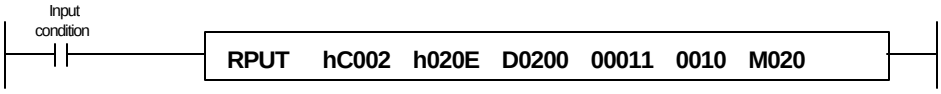

'**sl**' : upper byte → the code of remote module is hC0
lower byte → slot number of Fnet module of self station is h02

'**st**' : upper byte → slot number of remote A/D module is h02
lower byte → the station number of remote station is h0E

Remarks

The structure of ‘SS’ (Link status) of RPUT/RGET instruction is as following;

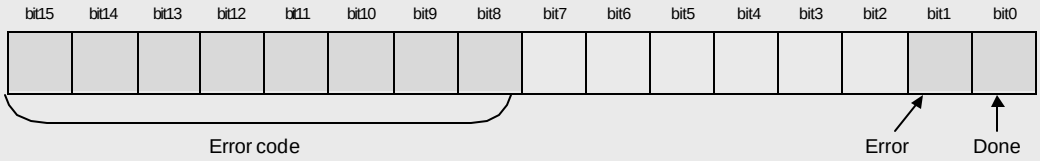

Bit 0 : Turns on during 1 scan after the communication is completed normally.

Bit 1 : Turns on during 1 scan after a communication error is occurred.

Bit 2 ~ 7 : Not used

Bit 8 ~ 15 : When the bit 1 turns on, the corresponding error code is stored.

8 MK Programming

8.1 Basic programming

The following example program shows how to set the operation condition for buffer memory of A/D conversion module. In this example, assume that the A/D module is mounted on the slot 2.

8.1.1 G6F-AD2A

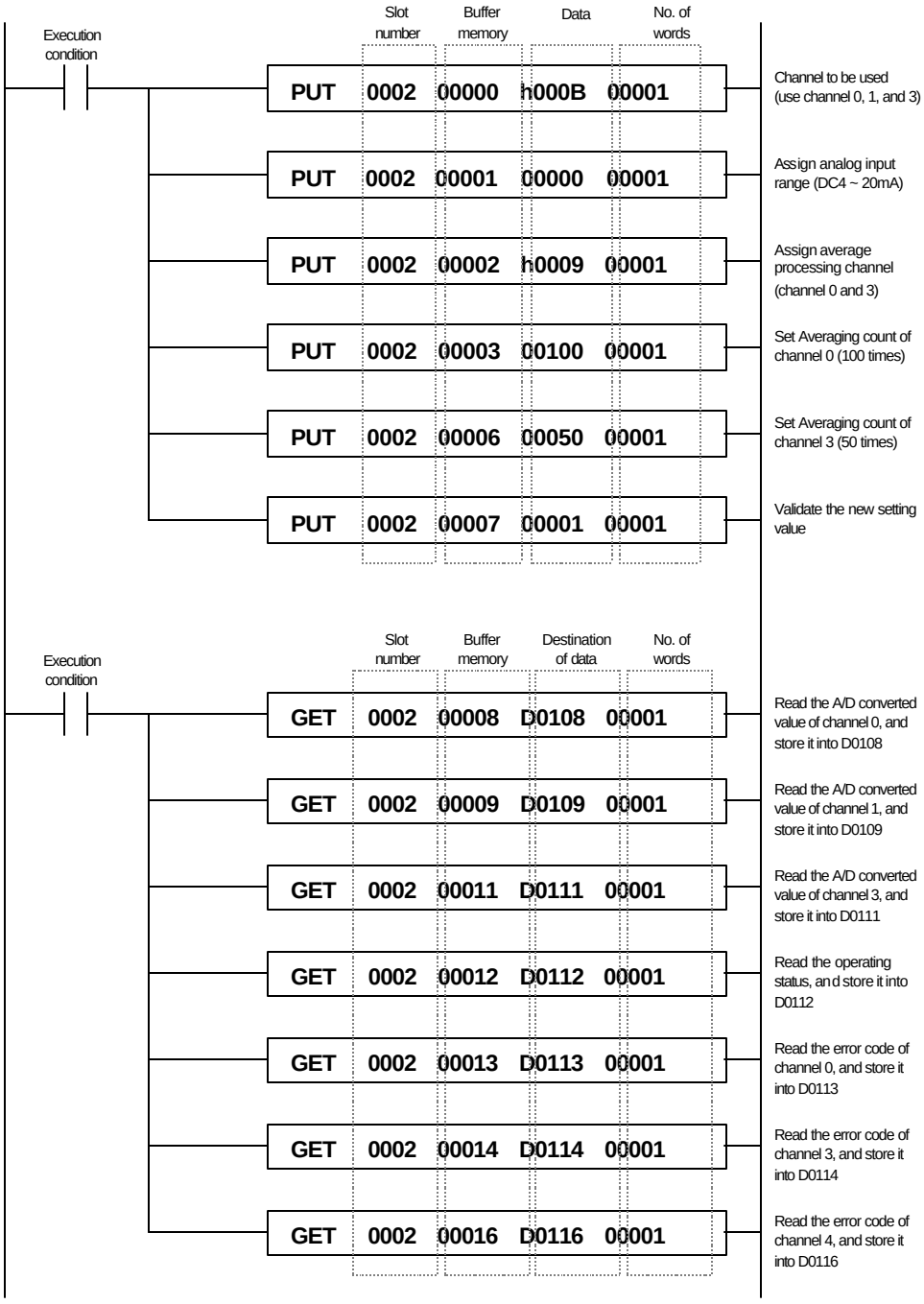

8.1.2 G3F-AD3A / G4F-AD3A

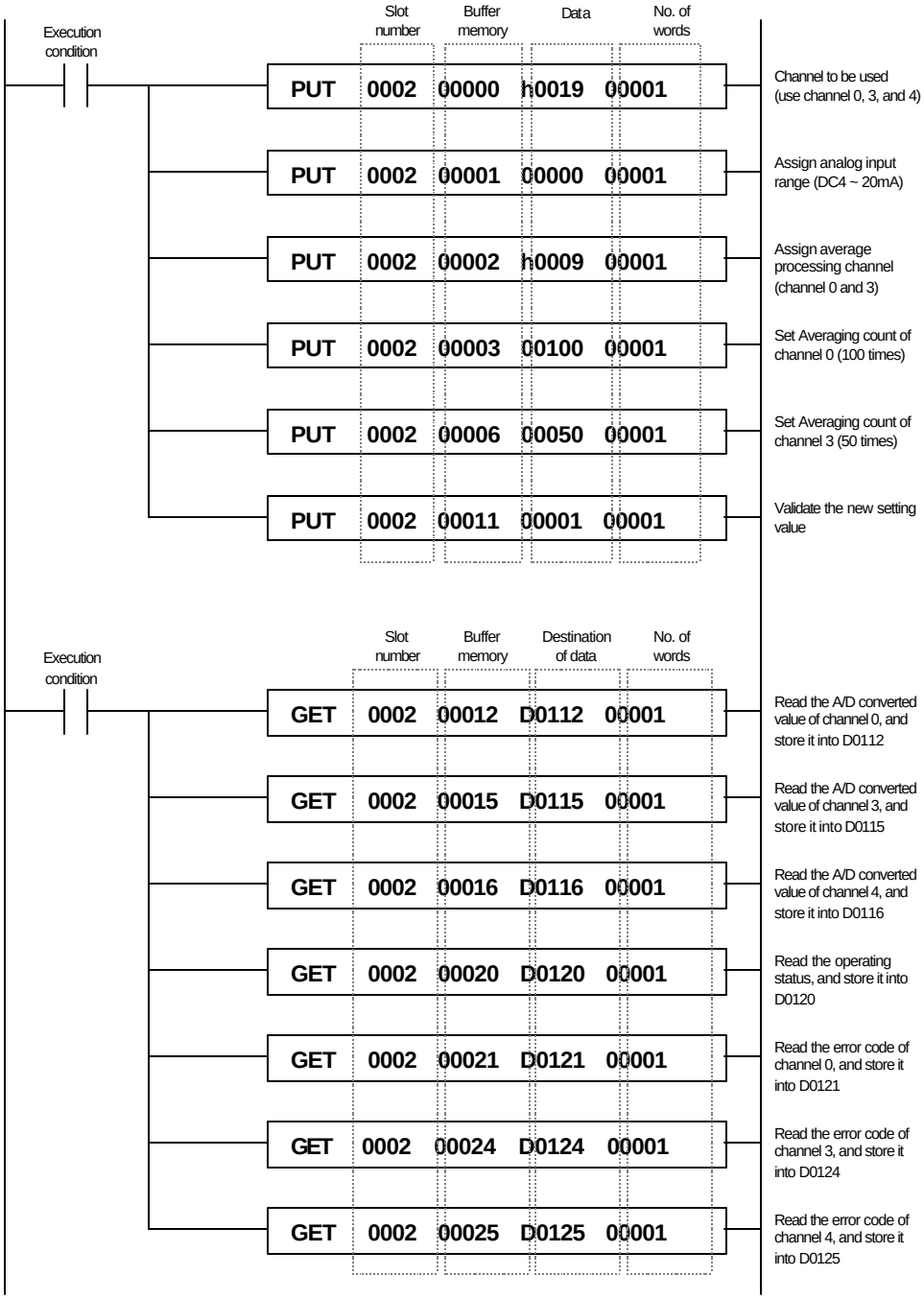

8.2 Example programming

8.2.1 A program for comparison of A/D converted value

1) System configuration

GM3-PA2A	K7P-30AS	G3F-AD3A	G3I-D22A	G3Q-RY4A	G3Q-RY4A

(A/D module is mounted on slot 0)

2) Initial setting for A/D module

No	Item	Setting	Buffer memory address	Data to be written
1	Channel to be used	Ch 0, 2, 4	0	h0015
2	Analog input type and range	DC4~20mA	1	h0000
3	Averaging processing enable	Ch 2, 4	2	h0014
4	Averaging count	Ch2 : 100 times	5	h0064
		Ch 4 : 50 times	7	h0032
5	Validate setting		11	h0001

3) Description of program

① Turns on P0010 bit when the digital value of channel 0 is less than 2000

② Turns on P0011 bit when the digital value of channel 2 is greater than 3600

③ Turns on P0012 bit when the digital value of channel 4 is in the range of 2000 ~ 3600

④ Turns on the P0013 bit when the digital value of channel 4 is 2800.

4) Programming

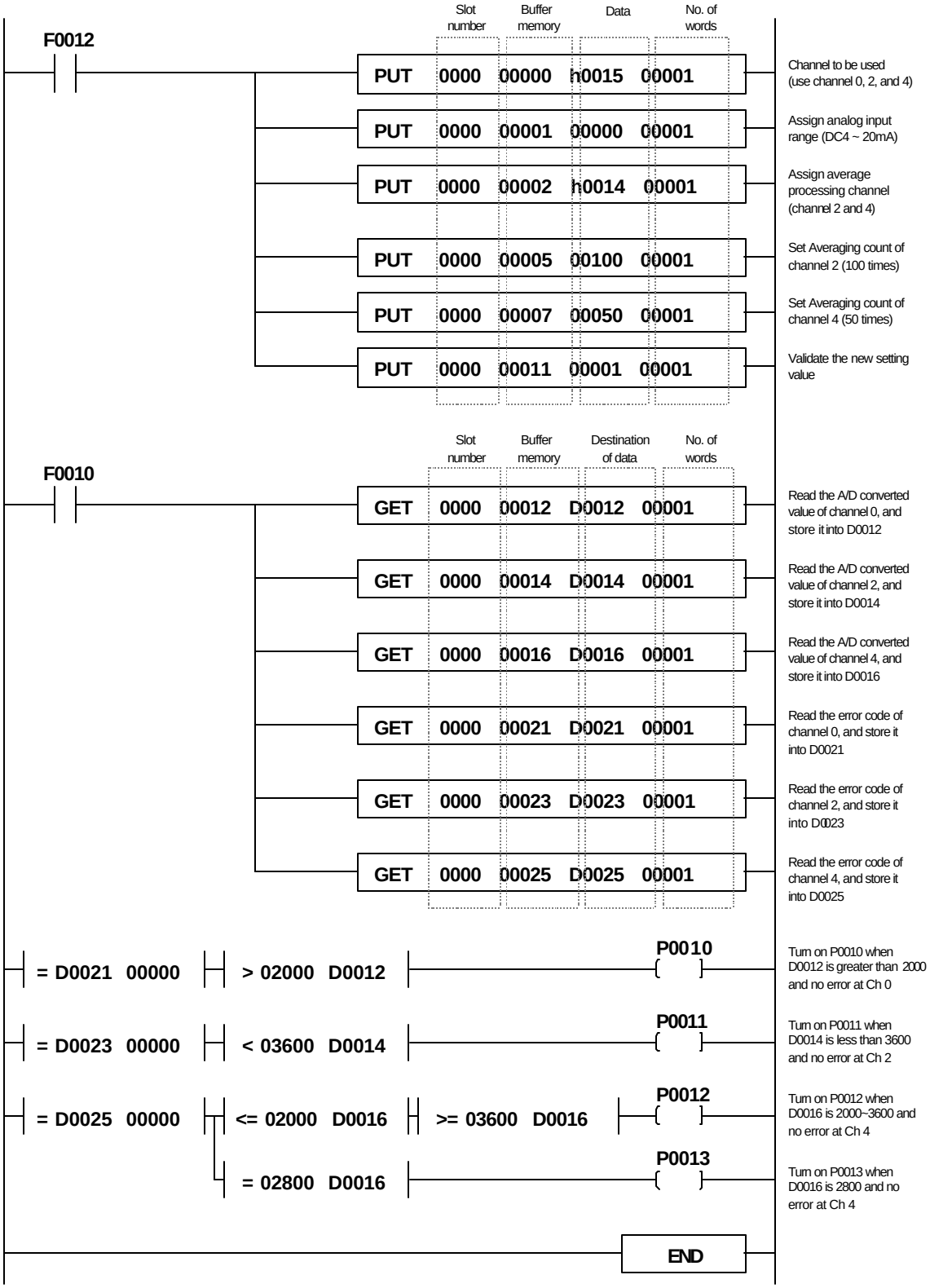

8.2.2 Output the analog input value by 7-segment display

1) System configuration

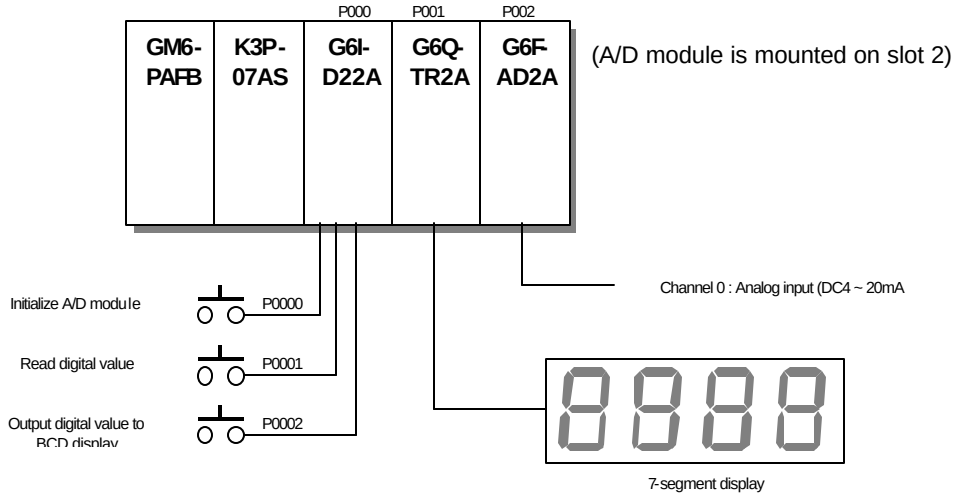

2) Initial setting for A/D module

No	Item	Setting	Buffer memory address	Data to be written
1	Channel to be used	Ch 0	0	h0001
2	Analog input type and range	DC4~20mA	1	h0000
3	Averaging processing enable	Ch 0	2	h0001
4	Averaging count	Ch 0 : 10 times	3	h000A
5	Validate setting		7	h0001

3) Description of program

① When the P0000 is on, initialize the A/D module.

② When the P0001 is on, read the digital value of channel 0 from buffer memory of A/D module and store it into the D0008.

③ When the P0002 is on, output the contents of D0008 to the 7-segment display.

4) Programming

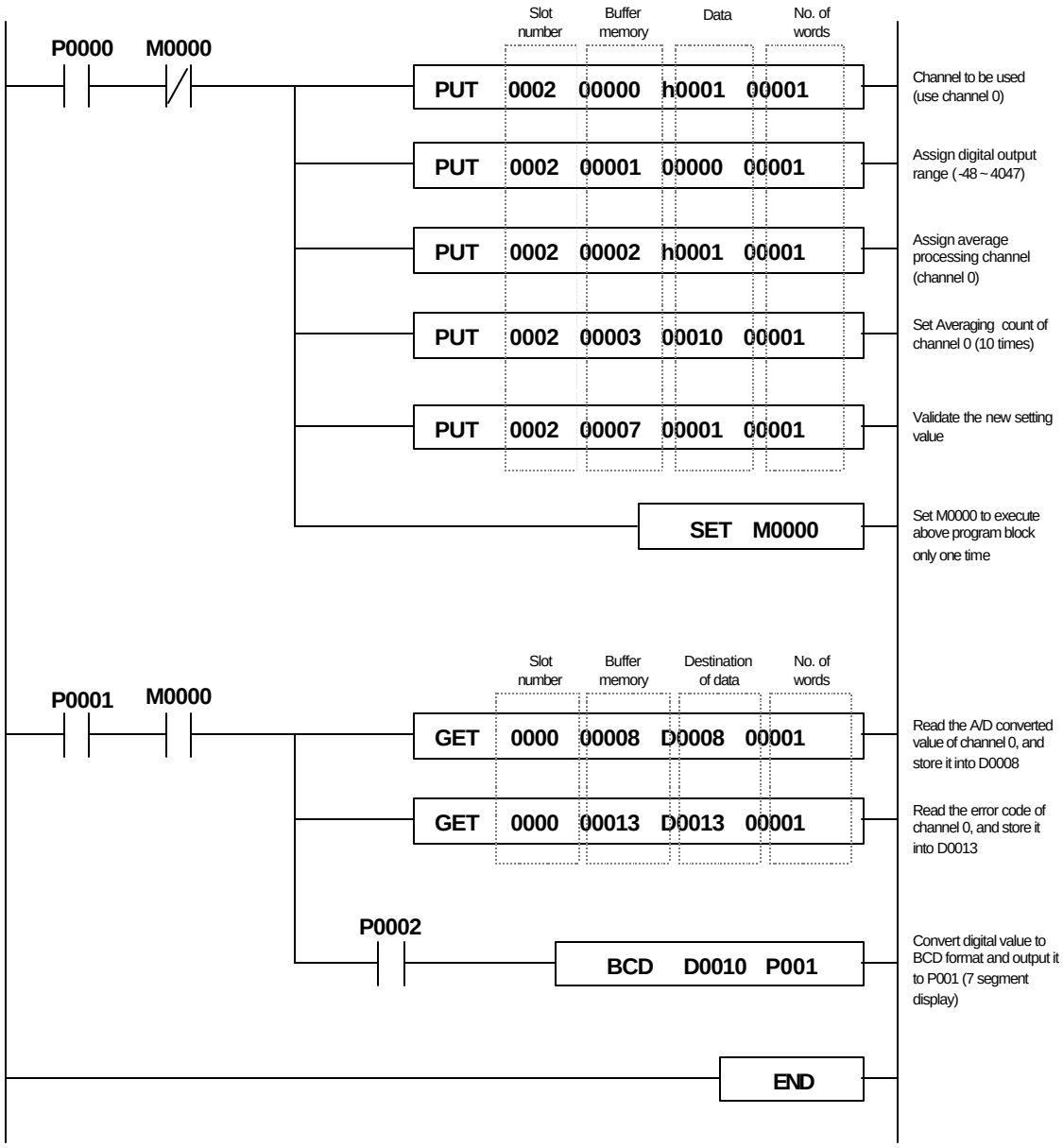

8.2.3 An A/D module mounted on a remote station

1) System configuration

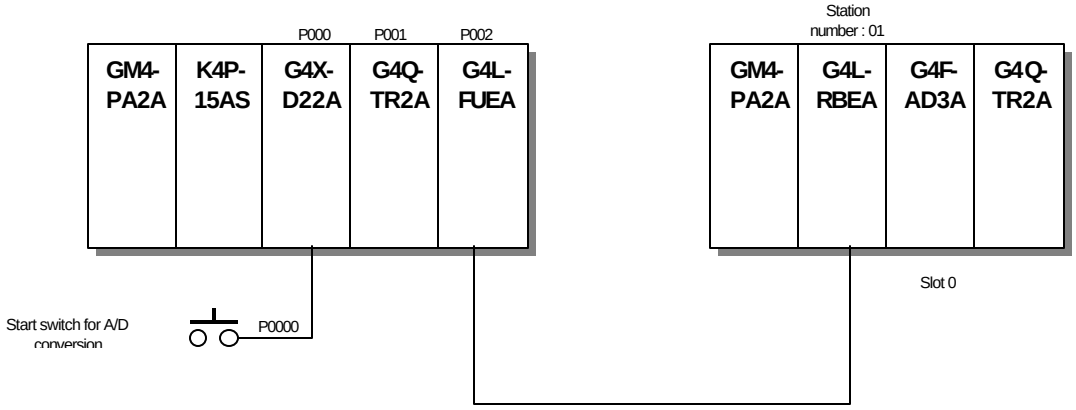

Fnet communication module on self-station : slot 2

Fnet remote module of remote station : station number 01

A/D module of remote station : slot 0, remote code = hC0

2) Initial setting of A/D module

No	Item	Setting	Buffer memory address	Data to be written
1	Channel to be used	Ch 0	0	h0001
2	Analog input type and range	0 ~ 10 VDC	1	h0001
3	Averaging processing enable	Ch 0	2	h0001
4	Averaging count	Ch 0 : 10 times	3	h000A
5	Validate setting		7	h0001

3) Description of program

① When the digital converted value of channel 0 of remote A/D module is less than 2000, turns on P0010 of self-station.

② When the digital converted value of channel 0 of remote A/D module is 2000 ~ 2999, turns on P0011 of self-station.

③ When the digital converted value of channel 0 of remote A/D module is 3000 ~ 3999, turns on P0012 of self-station.

④ When the digital converted value of channel 0 of remote A/D module is 4000 or greater, turns on P0013 of self-station.

4) Programming

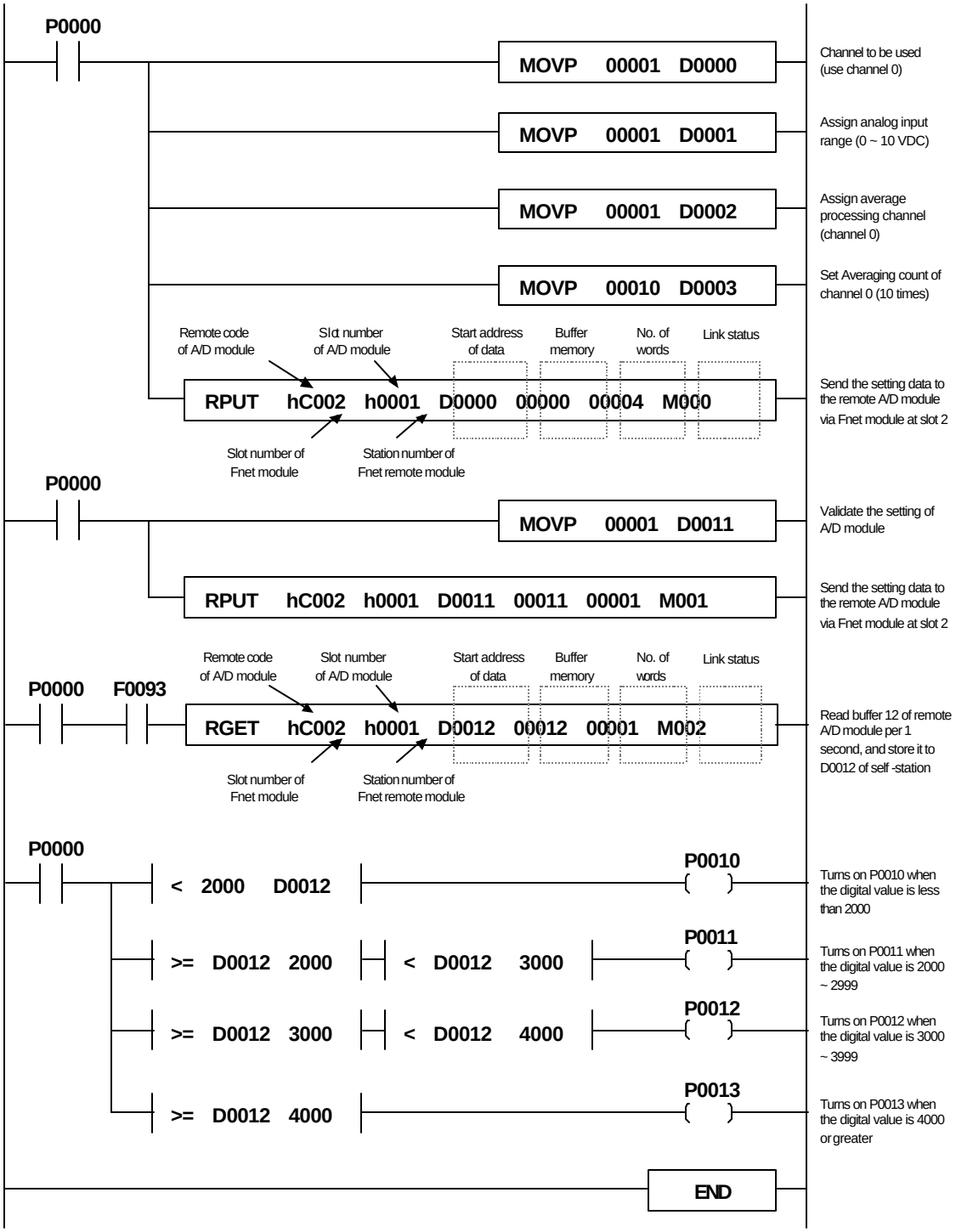

9 Dimension

9.1 G3F-AD3A

Unit : mm

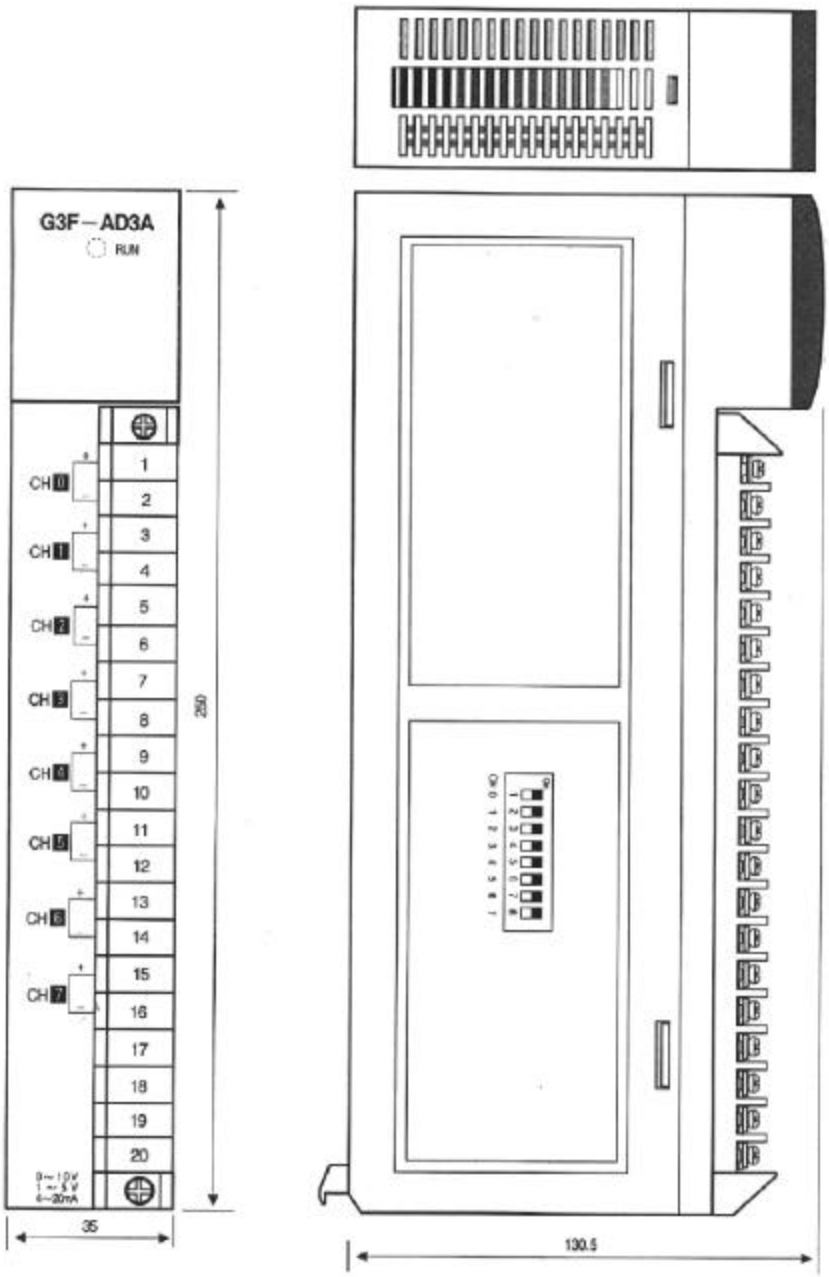

9.2 G4F-AD3A

Unit : mm

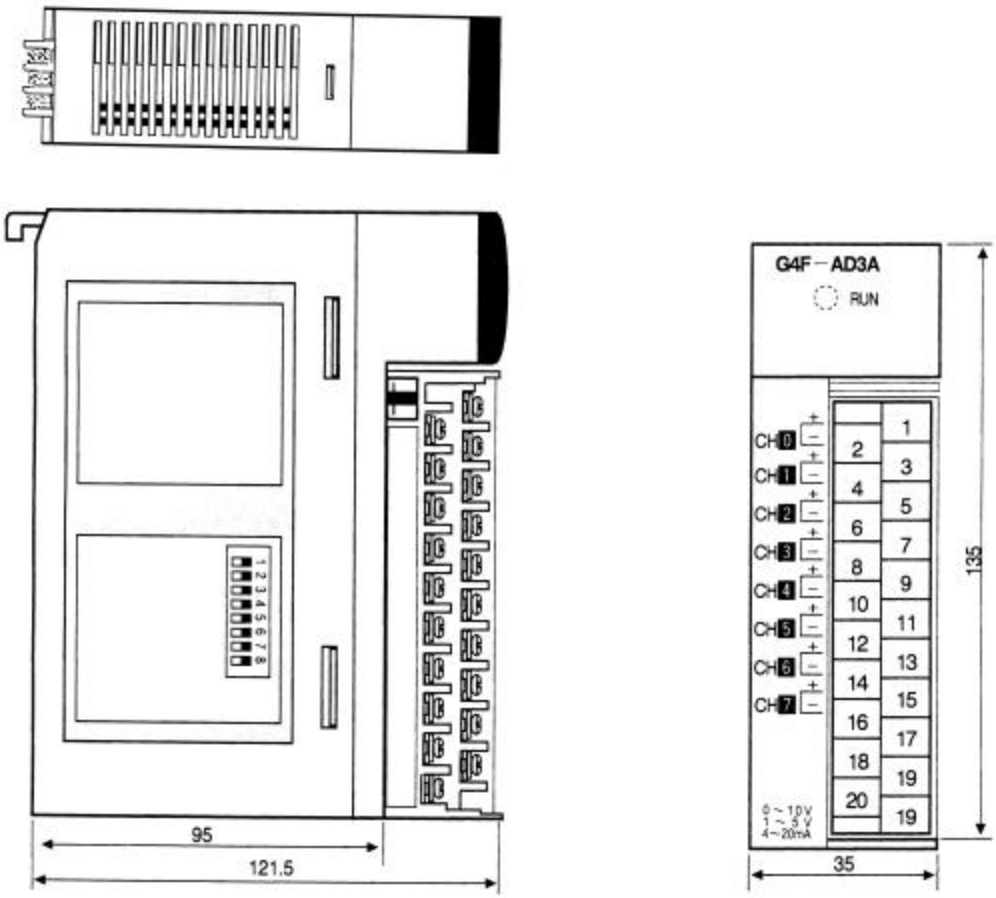

9.3 G6F-AD2A
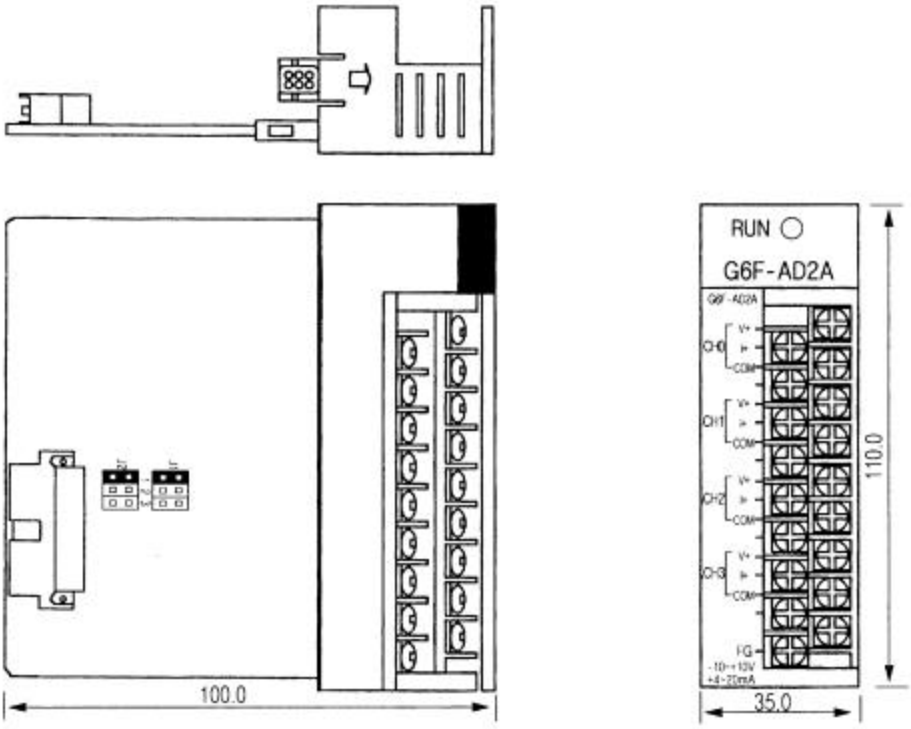
Unit : mm